Webstone
VALVE INNOVATION



HYDRO-CORE™

The Core of Any Professional Hydronic Installation

© Webstone Company Inc 2013 Rev 04/18/13

HYDRO-CORE™

Manifold Features

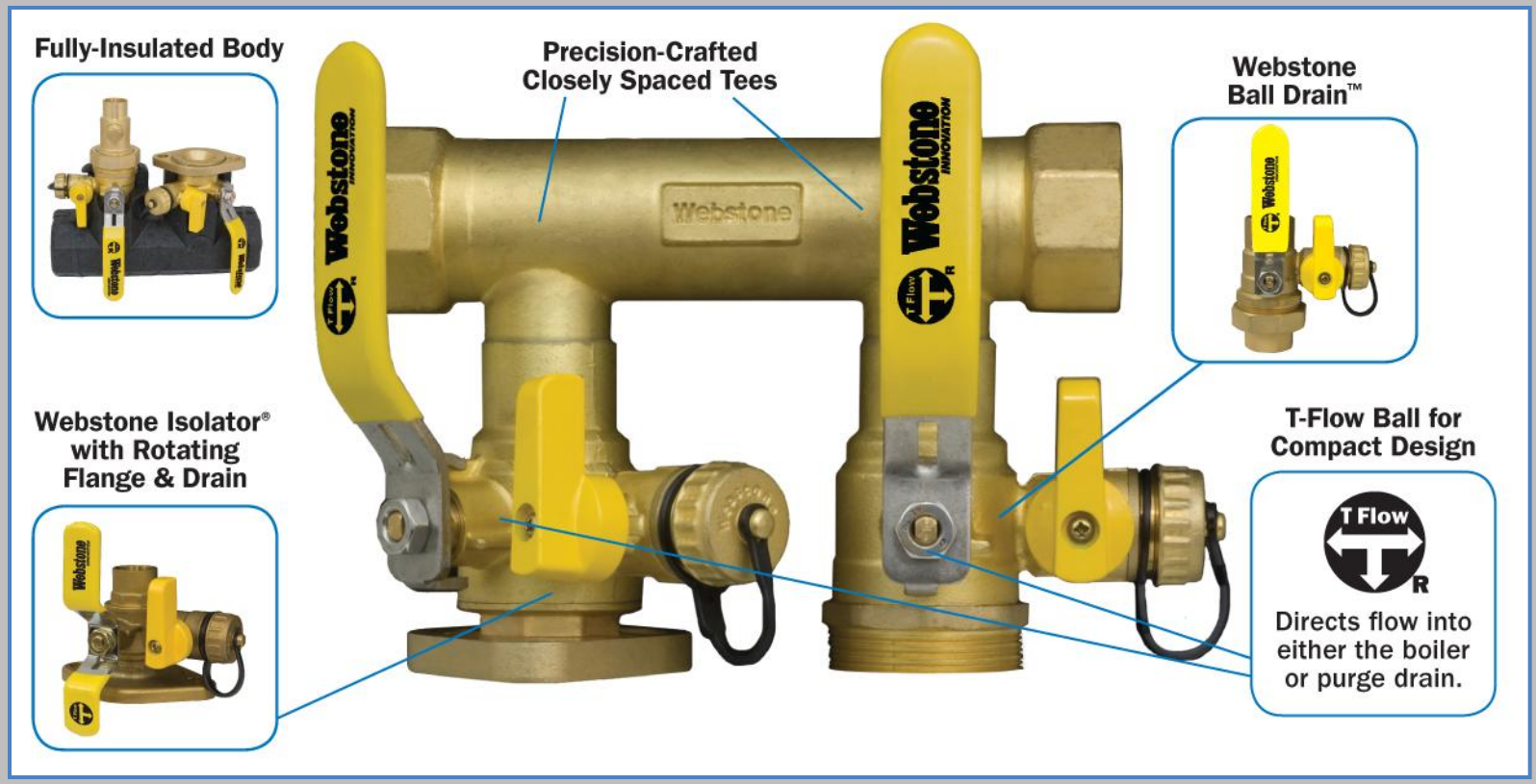

HYDRO-CORE™

Applications

Near-Boiler Loops

INSTALLATION KITS AVAILABLE:

Complete Near Boiler Piping Kits
Fully insulated supply and return lines available for select models.

Components Kits
Include all fittings required for field fabricating over 100 different boilers.

Union Connections
Are available to complete the manifold for all other applications.

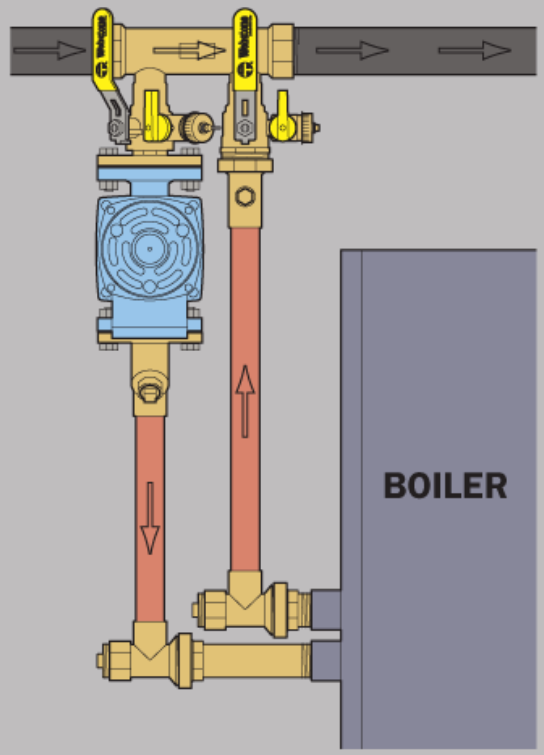

Secondary Circuit Loops

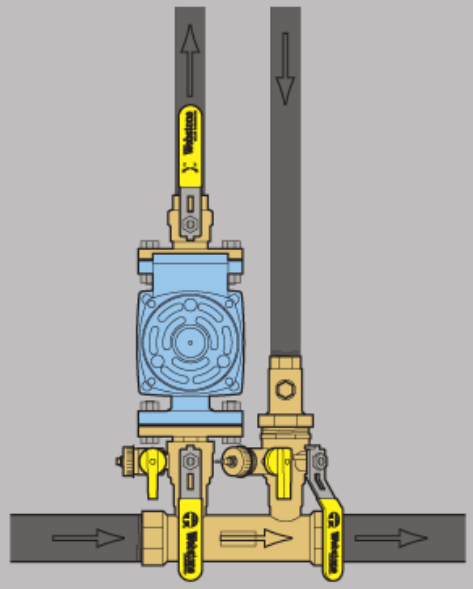

HYDRO-CORE™

Advantages

Precise Spacing for Hydraulic Separation

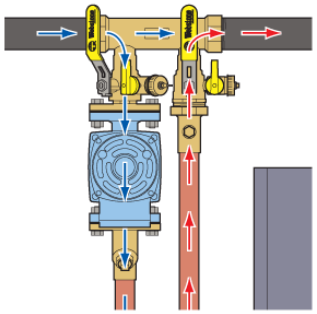

Simplifies Pump Isolation

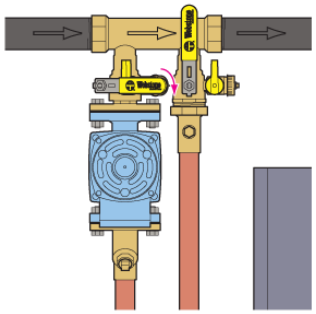

Simplifies System Purging

Through the Boiler

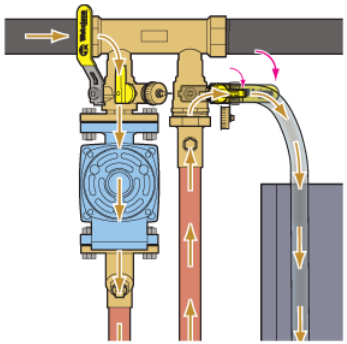

Outside the Boiler

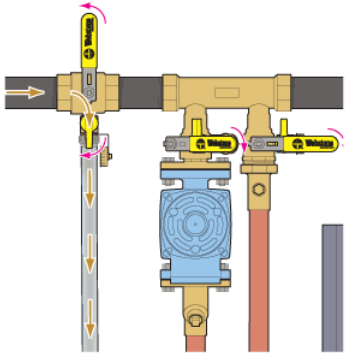

Easily Purge, Fill, or Descale* a Boiler or Secondary Hydronic Loop

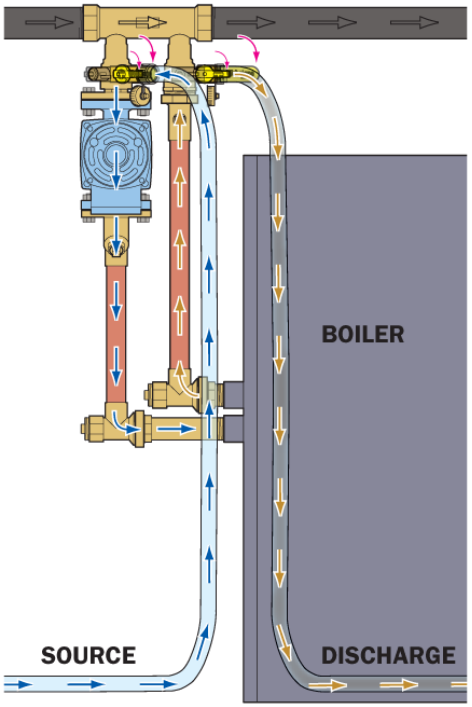

*Descaling may not be recommended for all boilers. Consult boiler manufacturer for details.

The Old Way

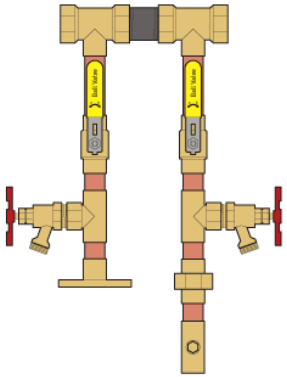

The Hydro-Core Way

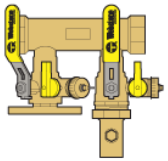

- Replaces 19 individual components
- Eliminates 13 connections
- Saves space
- Saves nearly 2 hrs. of labor

HYDRO-CORE™

Flange Options

Separate Union Connection(s) Required



Flange Right

Most Near Boiler Applications

Flange Left

Most Secondary Loops

No Flange Double Ball Drain

For Boilers w/ Integral Circulators

HYDRO-CORE™

Union Connections

Separate Component Required for Installation

- Choice of 3 styles
- Plugged Pressure Gauge Port model included with all Installation Kits



With 1/4" Plugged Pressure Gauge Port



Connection Only



With Multiple Device Ports

Plugged Connections for:

- *(2) 3/4" devices (Pressure Relief Valve, Low Water Cutoff)* OR
- *(1) 3/4" device & (1) 1/4" Pressure Gauge*

HYDRO-CORE™

Pump Connections

Optional Component

Choice of 2 Rotating Flanges

- **Rotating Flange**
  - Snug-fit detachable outer flange provides greater control during installation.
  - Included with Wall Hung Boiler Kits

- **Rotating Flange w/ "Y" Strainer**
  - Snug-fit detachable outer flange
  - Plugged ½" port in strainer cap for installation of drain valve
  - Included with Floor Standing Boiler Kits







HYDRO-CORE™

Installation Kits Available for Common Boiler Orientations

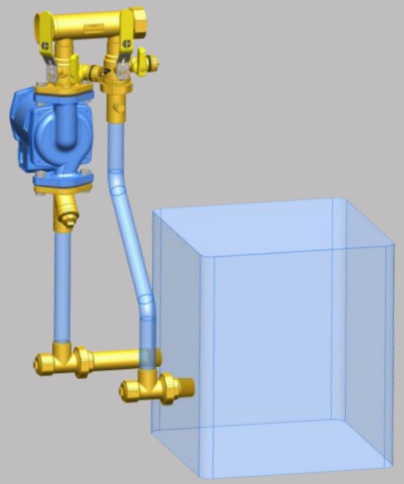

Floor Standing
Side Mount



Floor Standing
Top Mount

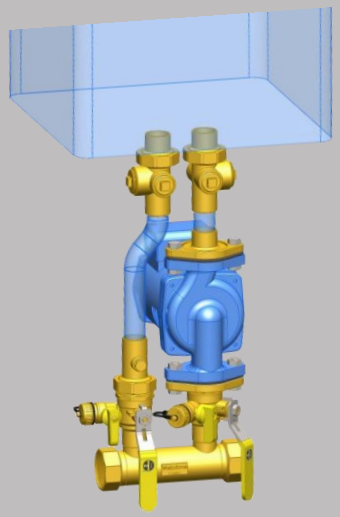

Wall Hung

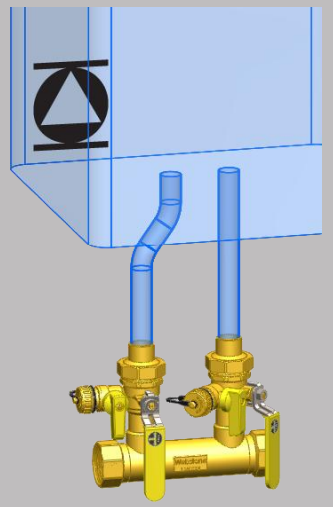

Wall Hung
w/ Integral
Circulator Pump

Kits to Fit Over 180 Different Boilers (and counting!)

HYDRO-CORE™

Complete Near Boiler Piping Kits
Copper Tubing

Fully fabricated copper supply & return lines available for select boilers

Requires Hydro-Core Manifold (Flange Right)

- One-piece, type-L bent copper tubing
- Outfitted with the right connections for your specific boiler
- Preassembled with the matching union end
- Fully insulated in high density EPDM foam insulation
- Fits 6 ½" circulator pumps



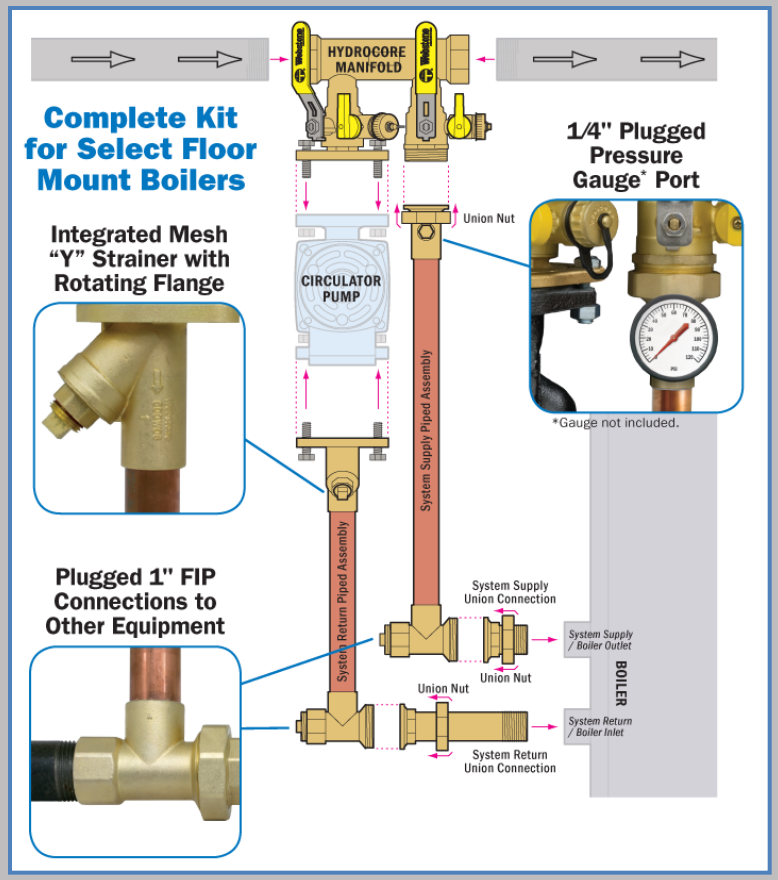

HYDRO-CORE™ FLEX

Complete Near Boiler Piping Kits

Flexible Stainless Steel Tubing

Fully fabricated flexible 304 stainless steel supply & return lines available for nearly any boiler with an integral pump

Includes:

- Hydro-Core Double Ball Drain Manifold
- 2 fully fabricated supply & return lines assembled with 12” lengths of flexible stainless steel tubing
- Outfitted with the right connections for your specific boiler
- Fully insulated in high density EPDM foam insulation
- Longer lines available upon request

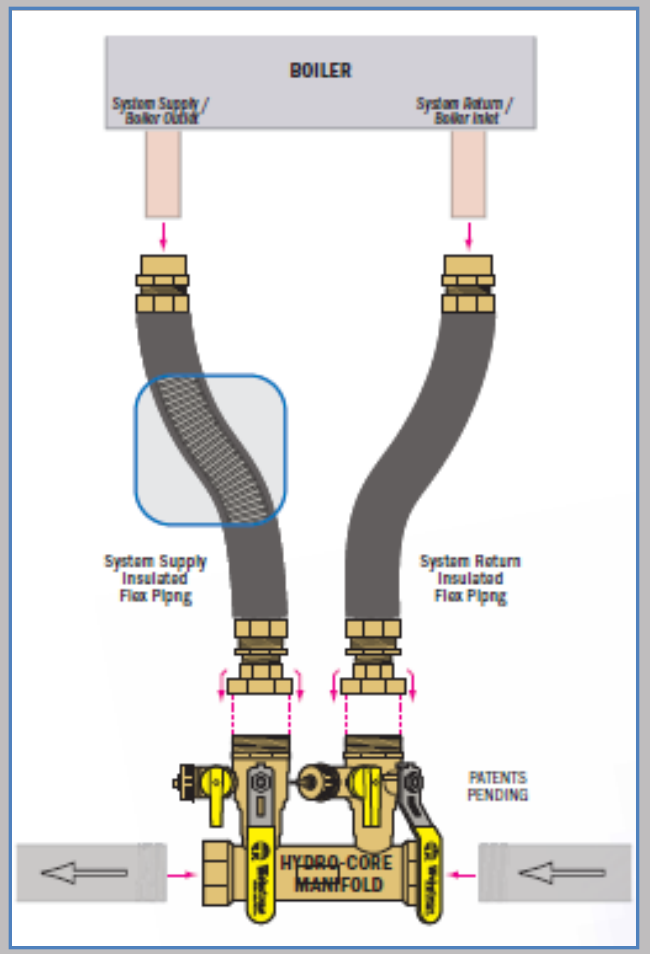

HYDRO-CORE™

Near Boiler Component Kits

Prepackaged sets of components required to field fabricate the near boiler loop

- Available for common boiler orientations
  - Floor Standing / Top Mount
  - Floor Standing / Side Mount
  - Wall Hung

- Requires designated Hydro-Core Manifold

See Webstone's Boiler Compatibility Resources to select the appropriate kit for your boiler.

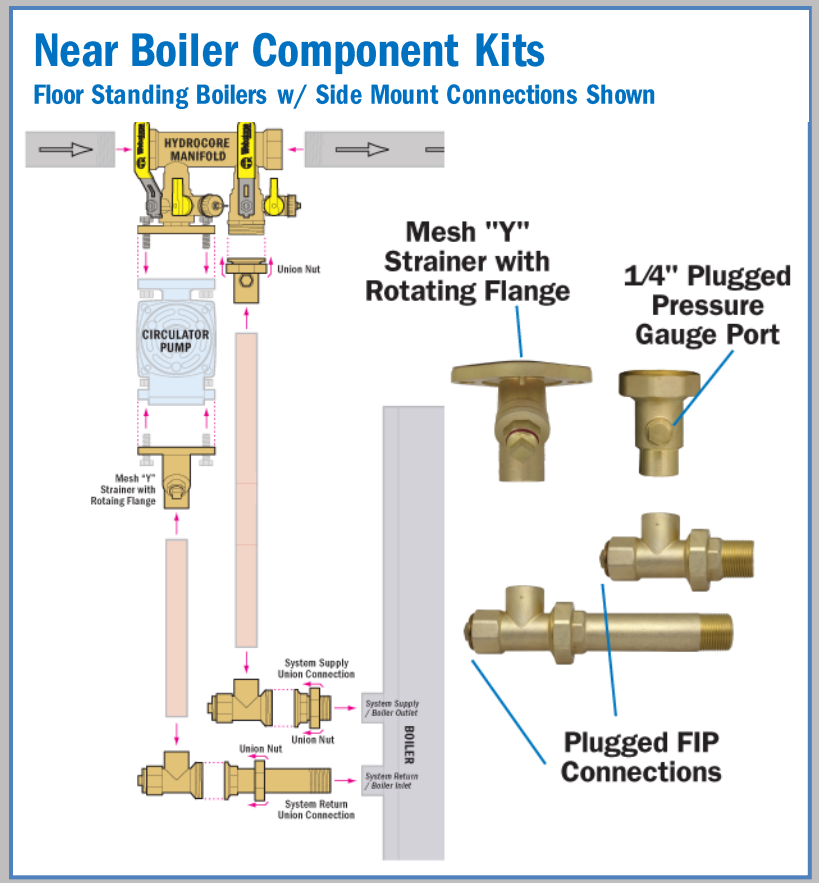

HYDRO-CORE™

Work Smarter

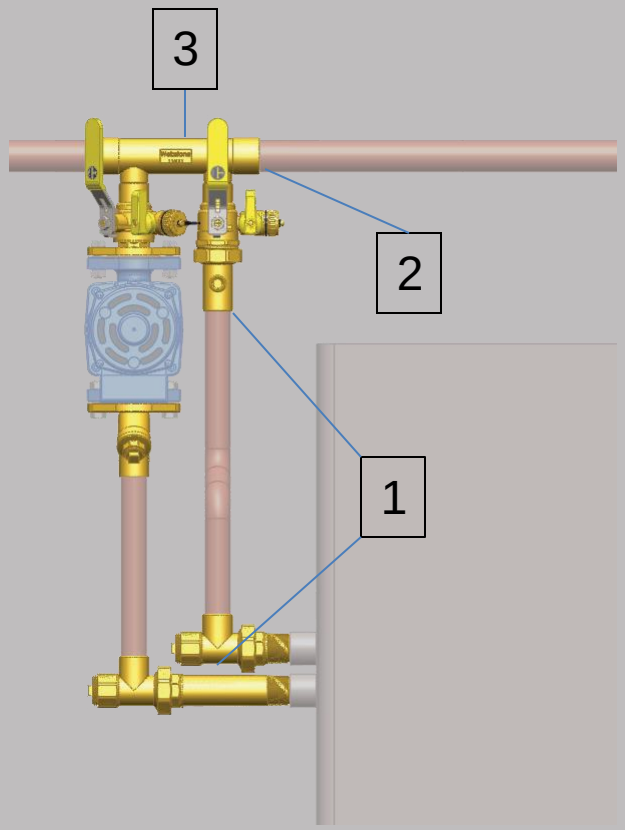

Plan Your Next Installation in 3 Simple Steps

1. Identify your boiler & select the corresponding Installation Kit.
2. Determine your pipe run size & connection type.
3. Select the proper Hydro-Core manifold.

HYDRO-CORE™

Where Would You Use Webstone?

Cast Iron/Conventional

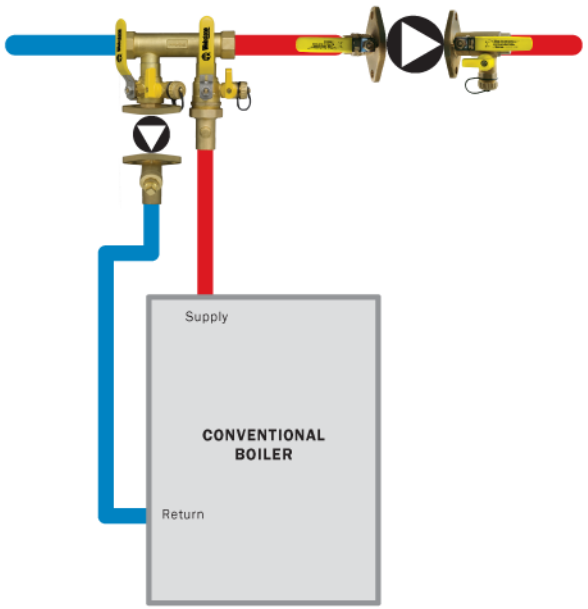

HYDRO-CORE™

Where Would You Use Webstone?

Near Boiler Mod/Con with Secondary Loop

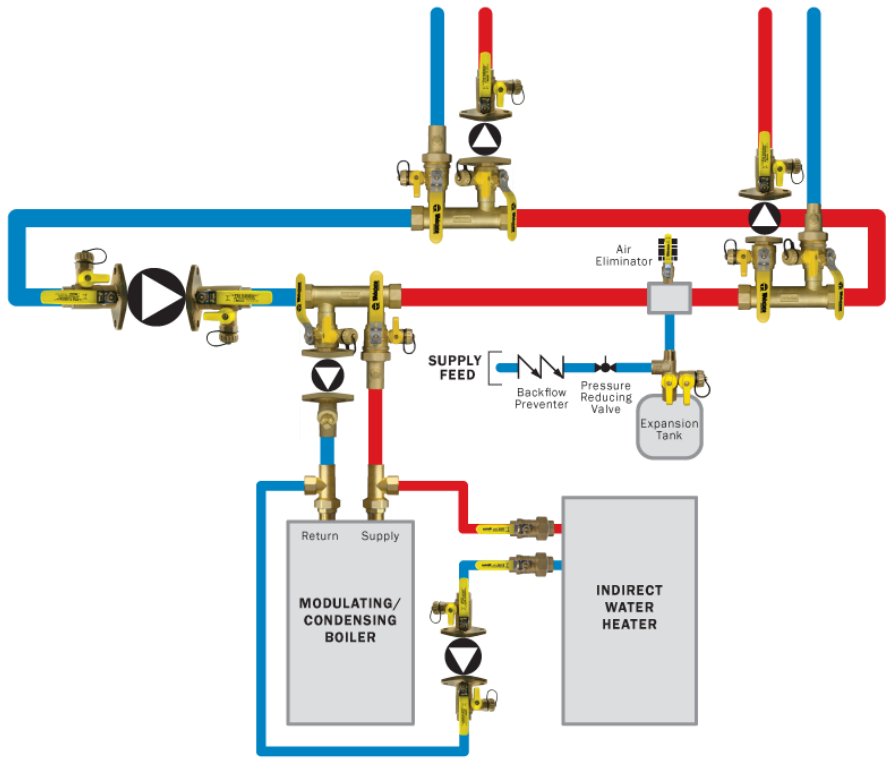

HYDRO-CORE™

Where Would You Use Webstone?

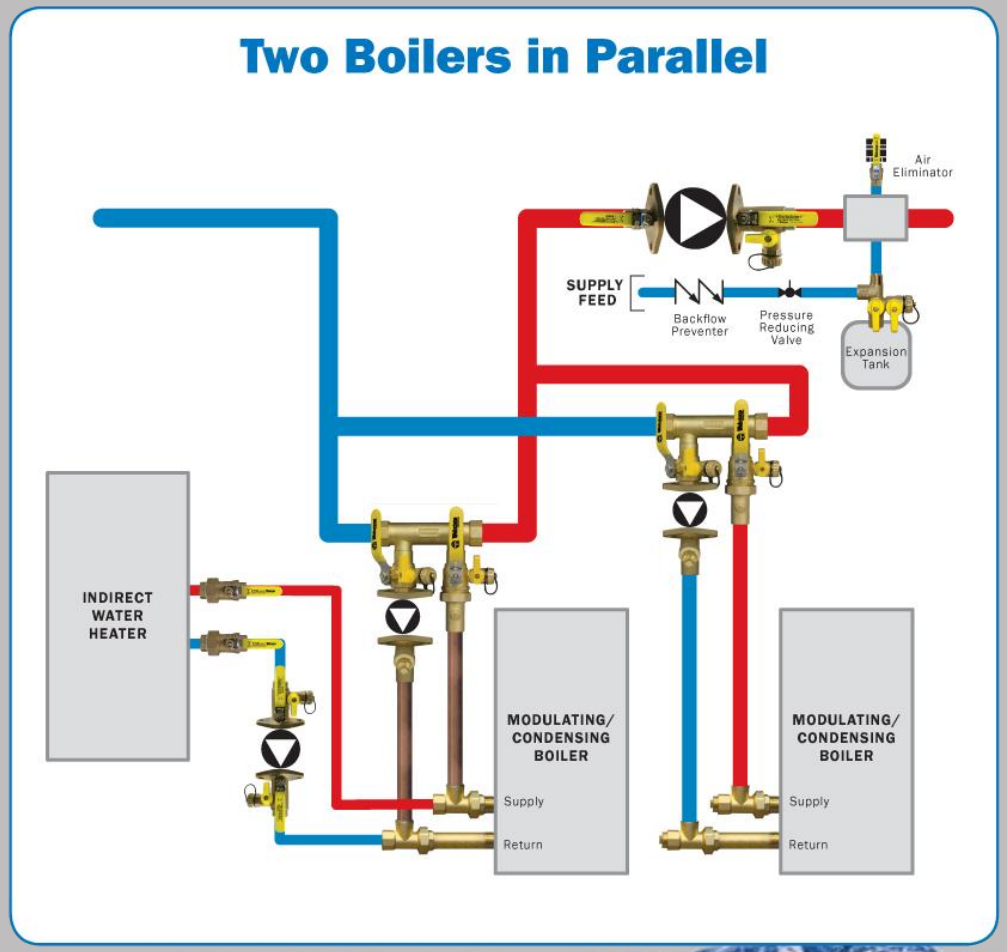

HYDRO-CORE™

Where Would You Use Webstone?

Multiple Heat Sources

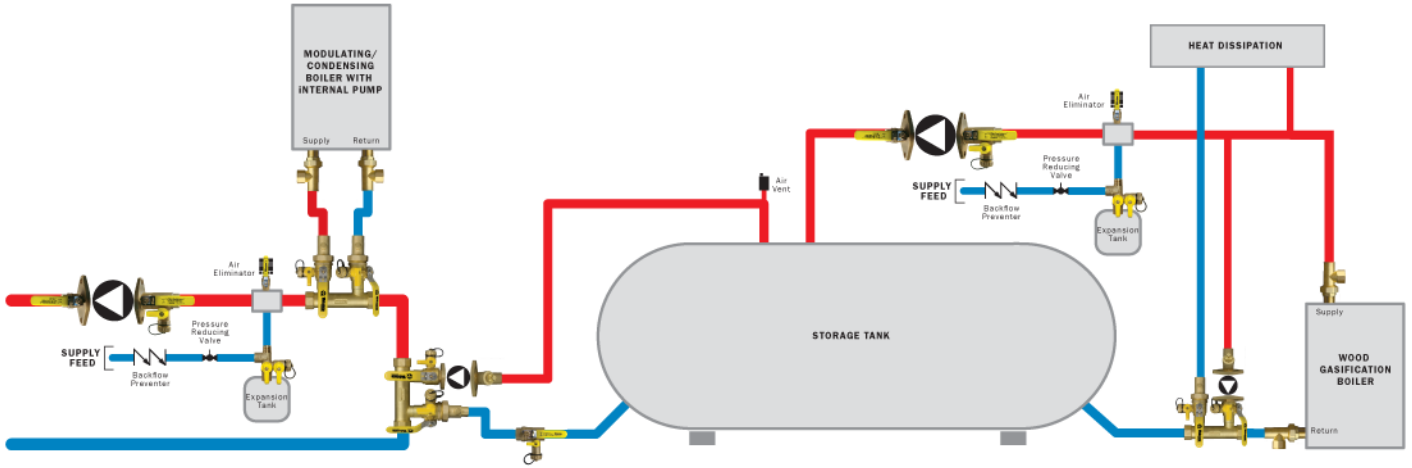

HYDRO-CORE™

Where Would You Use Webstone?

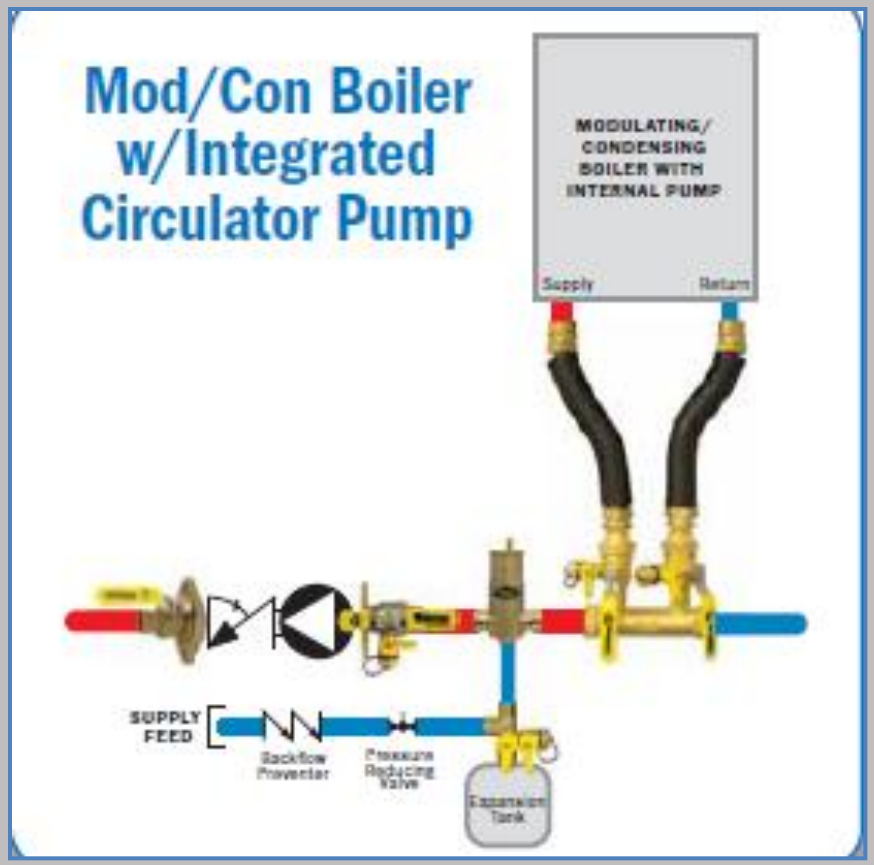

Webstone
VALVE INNOVATION



HYDRO-CORE™

Boiler Compatibility
May 2013

© Webstone Company Inc 2013 Rev 04/18/13

HYDRO-CORE™

Baxi

Wall Hung Boilers

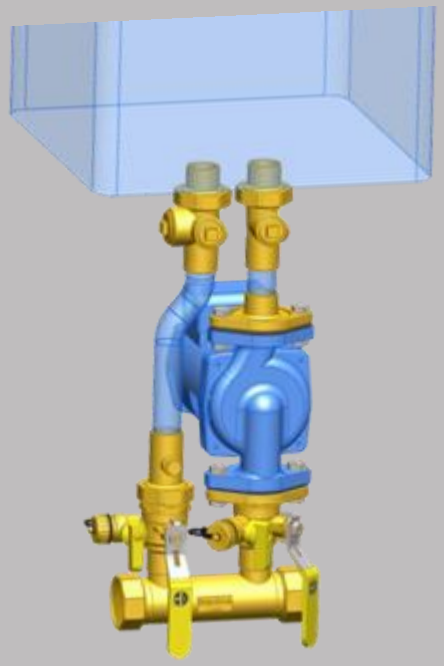

Model	Number	Boiler Connection	Connection to Hydro-Core	INSTALLATIONKIT
				Near Boiler Component Kit
Luna	HT 1.45	1 MIP	1	WH-144
	HT 1.65			
	HT 1.100	1 1/4 MIP	1 1/4	WH-245

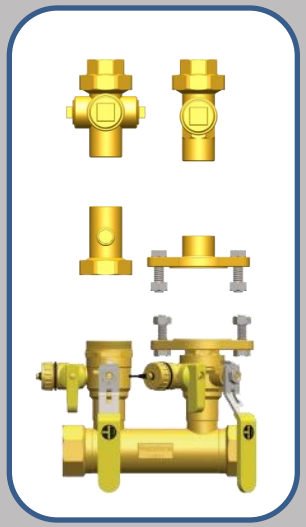

Connection to Hydro-Core	Manifold (Recommended Size in Bold)						
	Recommended Type	1" Run	1 1/4" Run		1 1/2" Run		2" Run
		SWT	FIP	SWT	FIP	SWT	SWT
1	Flange Right	58744-0	**48754-0**	**58754-0**	48764-0	58764-0	58774-0
1 1/4	Flange Right	-	48755-0	58755-0	**48765-0**	**58765-0**	58775-0

Baxi

Wall Hung Boilers w/ Integral Pumps



Model	Number	Boiler Connection	Connection to Hydro-Core	HYDRO-CORE FLEX	
				FIP	SWT
Luna	HT 380	3/4 SWT	1	4FK3-WIS	5FK3-WIS
	HT 1.33				
Luna 3	Comfort 310				
	Comfort 1.31				

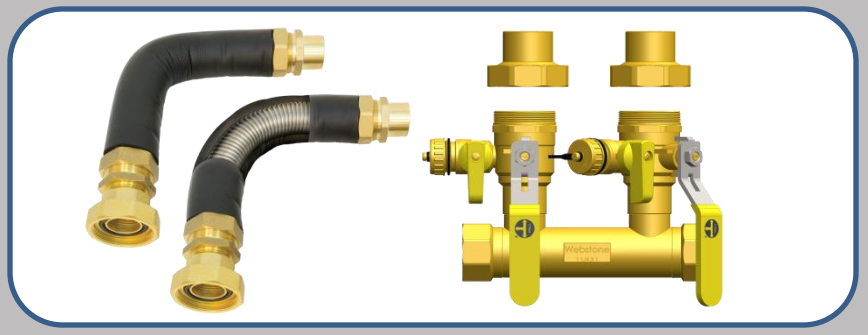

HYDRO-CORE™

Biasi

Wall Hung Boilers w/ Integral Pumps

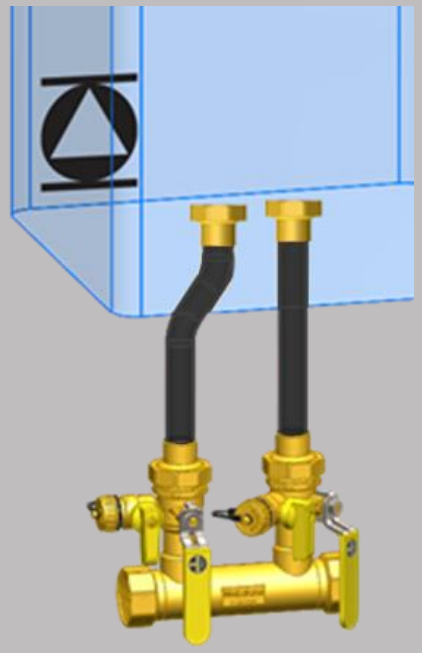

Model	Number	Boiler Connection	Connection to Hydro-Core	HYDRO-CORE FLEX™	
				FIP	SWT
Riva Compact	M130.30CR	3/4 SWT	1	4FK3-WIS	5FK3-WIS
Riva Combi	M35.30CB				
Riva Plus Combi	M135.30CM				
Riva Plus Compact	M135.30CR				

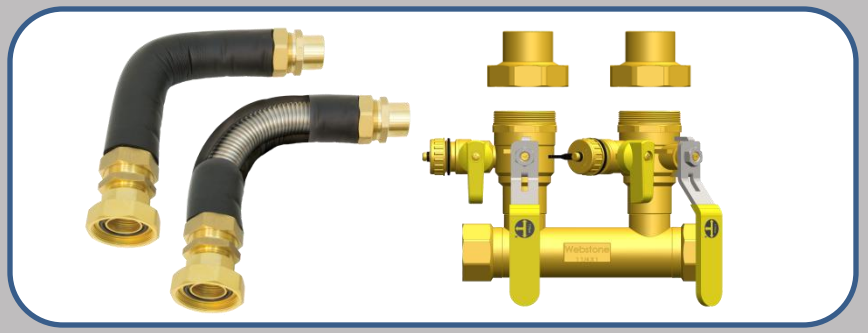

HYDRO-CORE™

Bosch

Wall Hung Boilers w/ Integral Pumps



Model	Number	Boiler Connection	Connection to Hydro-Core	HYDRO-CORE FLEX	
				FIP	SWT
GreenStar 57	ZBR16-3A	1 MIP	1	4FK4-WIF	5FK4-WIF
GreenStar 100	ZBR28-3A				
GreenStar 131	ZBR35-3A				
GreenStar 151	ZBR42-3A				
GreenStar Combi 100	ZWB28-3A				
GreenStar Combi 151	ZWB42-3A				

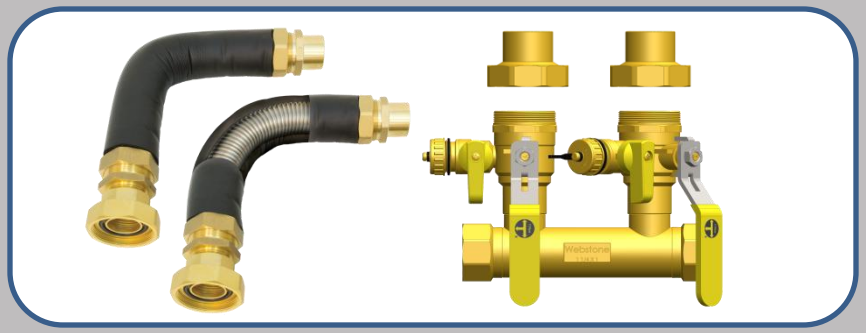

HYDRO-CORE™

Burnham

Floor Standing / Side Mount Boilers

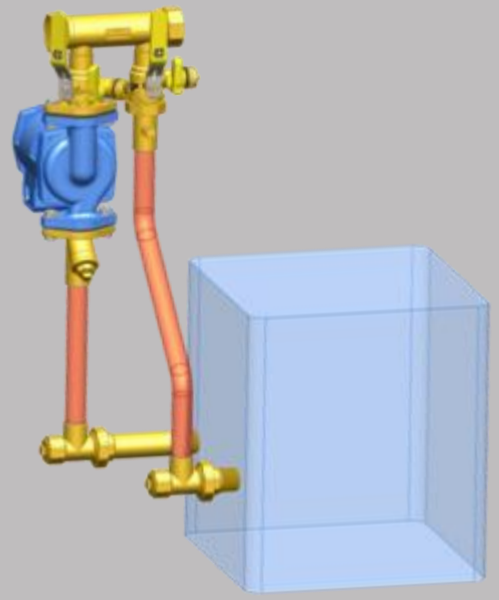

Model	Number	Boiler Connection	Connection to Hydro-Core	INSTALLATION KIT	
				Near Boiler Component Kit	Complete Near Boiler Piping Kit
Alpine	ALP-080	1 FIP	1	FS-184	NBP4-080
	ALP-105				NBP4-105
	ALP-150				NBP4-150
	ALP-210				NBP4-210
	ALP-285	1 1/4 FIP	1 1/4	FS-185	-

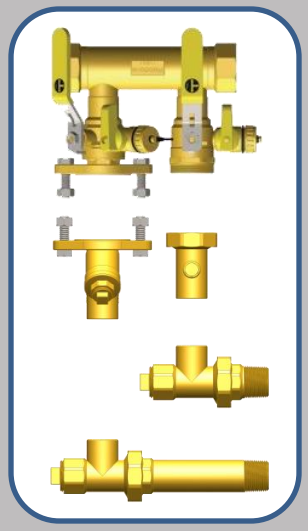

Connection to Hydro-Core	Manifold (Recommended Size in Bold)						
	Recommended Type	1" Run	1 1/4" Run		1 1/2" Run		2" Run
		SWT	FIP	SWT	FIP	SWT	SWT
1	Flange Right	58744-0	**48754-0**	**58754-0**	48764-0	58764-0	58774-0
1 1/4	Flange Right	-	48755-0	58755-0	**48765-0**	**58765-0**	58775-0

HYDRO-CORE™

Crown Boiler

Floor Standing (Wall Mount Option)

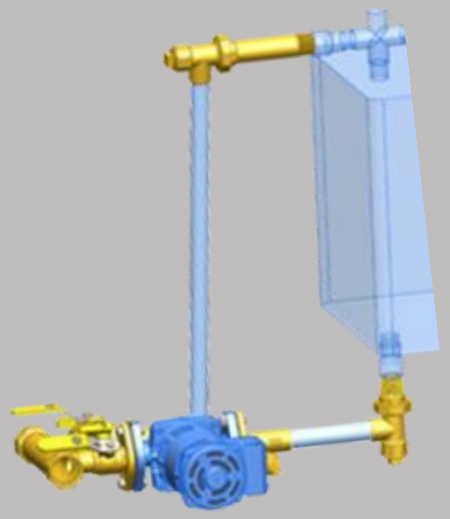

Model	Number	Boiler Connection	Connection to Hydro-Core	INSTALLATIONKIT
				Near Boiler Component Kit
Bimini	BWC-070	1 FIP	1	FS-184
	BWC-090			
	BWC-120			
	BWC-150			
	BWC-151	1 1/4 FIP	1 1/4	FS-185
	BWC-225			

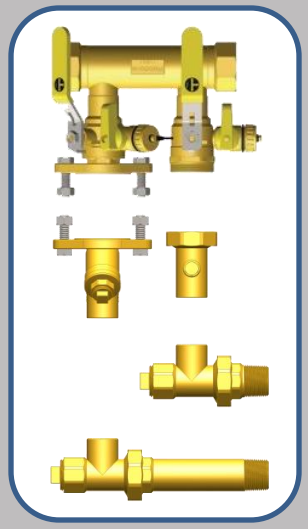

Connection to Hydro-Core	Manifold (Recommended Size in Bold)						
	Recommended Type	1" Run	1 1/4" Run		1 1/2" Run		2" Run
		SWT	FIP	SWT	FIP	SWT	SWT
1	Flange Right	58744-0	**48754-0**	**58754-0**	48764-0	58764-0	58774-0
1 1/4	Flange Right	-	48755-0	58755-0	**48765-0**	**58765-0**	58775-0

HYDRO-CORE™

Crown Boiler

Wall Hung Boilers w/ Integral Pumps

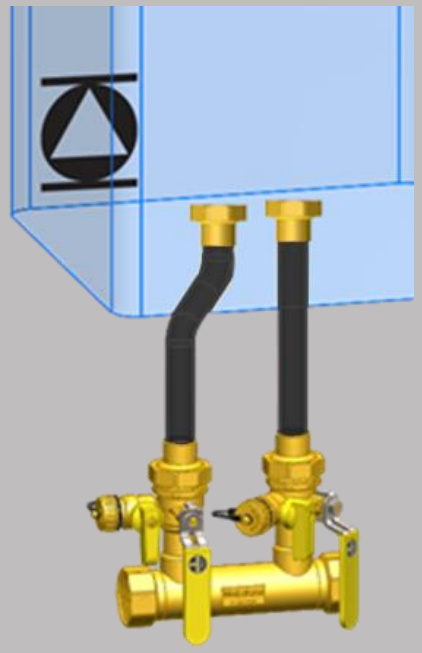

Model	Number	Boiler Connection	Connection to Hydro-Core	HYDRO-CORE FLEX	
				FIP	SWT
Maui	MWC116E*L	3/4 SWT	1	4FK3-WIS	5FK3-WIS
Maui Combi	MWC116E*T				

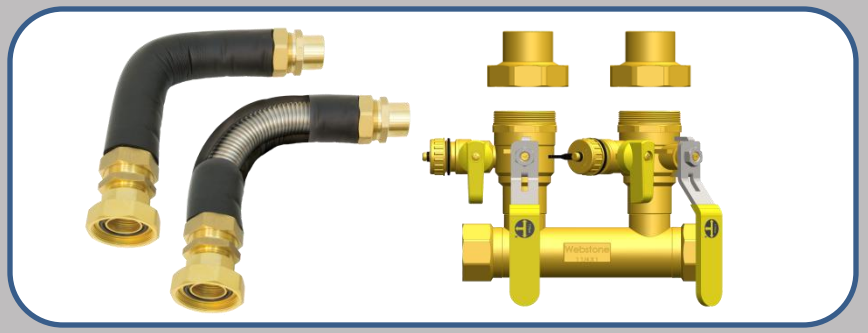

HYDRO-CORE™

Heat Transfer Products

Floor Standing / Side Mount Boilers

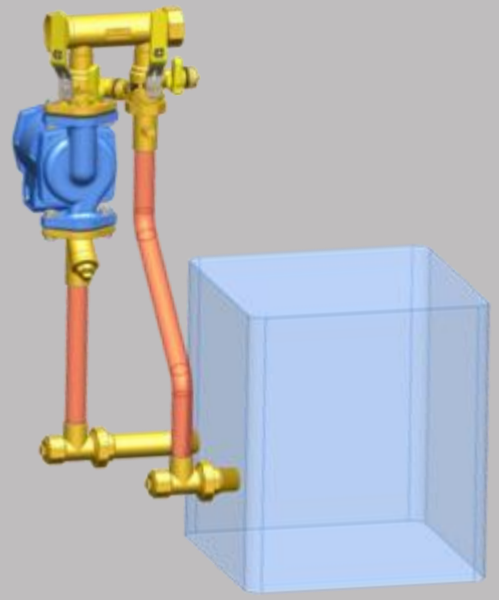

Model	Number	Boiler Connection	Connection to Hydro-Core	INSTALLATIONKIT Near Boiler Component Kit
Elite	EL080	1 FIP	1	FS-184
	EL110			
	EL150			
	EL220			
	EL299	1 1/4 FIP	1 1/4	FS-185
Elite Plus	ELP-110	1 FIP	1	FS-184
	ELP-199			

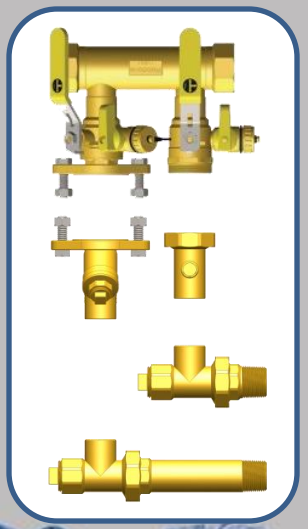

Connection to Hydro-Core	Manifold (Recommended Size in Bold)						
	Recommended Type	1" Run	1 1/4" Run		1 1/2" Run		2" Run
		SWT	FIP	SWT	FIP	SWT	SWT
1	Flange Right	58744-0	**48754-0**	**58754-0**	48764-0	58764-0	58774-0
1 1/4	Flange Right	-	48755-0	58755-0	**48765-0**	**58765-0**	58775-0

HYDRO-CORE™

Heat Transfer Products

Wall Hung Boilers

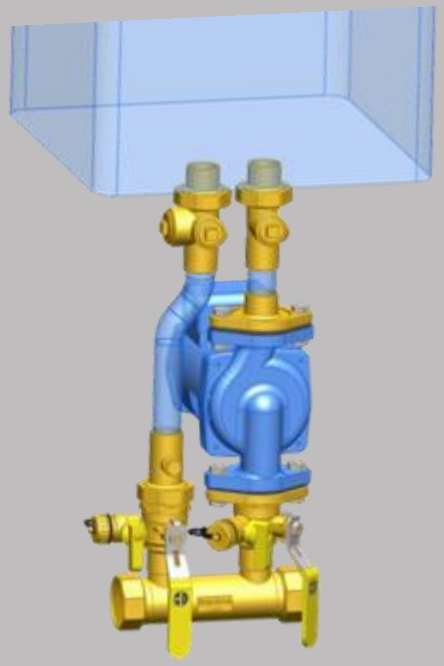

Model	Number	Boiler Connection	Connection to Hydro-Core	INSTALLATIONKIT
				Near Boiler Component Kit
Elite FT	EFT55	1 SWT	1	WH-154
	EFT80			
	EFT110			
	EFT-155	1 1/4 SWT	1 1/4	WH-255
	EFT-199			
	EFT-285			
MC Series	M50			
	M80			
	M99			
	MC120			

Connection to Hydro-Core	Manifold (Recommended Size in Bold)						
	Recommended Type	1" Run	1 1/4" Run		1 1/2" Run		2" Run
		SWT	FIP	SWT	FIP	SWT	SWT
1	Flange Right	58744-0	**48754-0**	**58754-0**	48764-0	58764-0	58774-0
1 1/4	Flange Right	-	48755-0	58755-0	**48765-0**	**58765-0**	58775-0

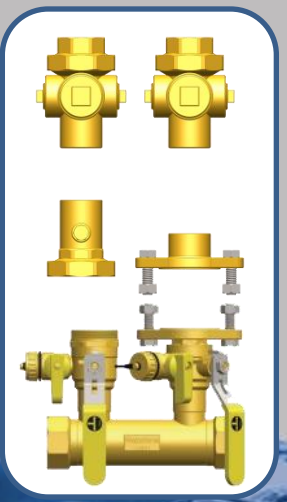

HYDRO-CORE™

IBC Technologies

Floor Standing / Side Mount Boilers

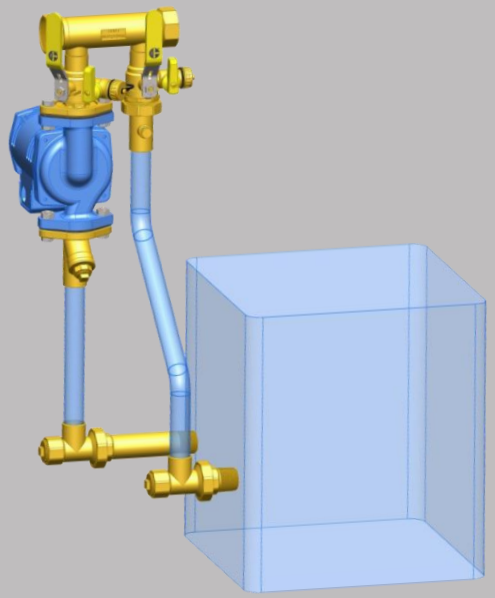

Model	Number	Boiler Connection	Connection to Hydro-Core	INSTALLATIONKIT
				Near Boiler Component Kit
SL	20-115	1 MIP	1	FS-184
Boiler offers multi-port piping design, side left option shown. Other Hydro-Core Manifolds may apply - see mfg. for details.				

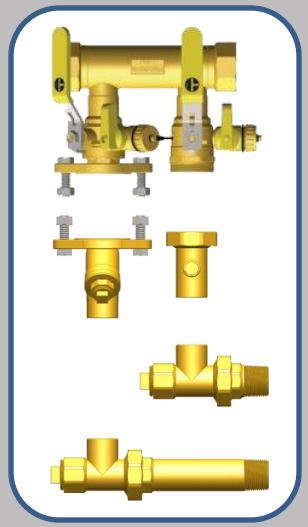

Connection to Hydro-Core	Manifold (Recommended Size in Bold)						
	Recommended Type	1" Run	1 1/4" Run		1 1/2" Run		2" Run
		SWT	FIP	SWT	FIP	SWT	SWT
1	Flange Right	58744-0	**48754-0**	**58754-0**	48764-0	58764-0	58774-0

HYDRO-CORE™

IBC Technologies

Floor Standing / Side Mount Boilers

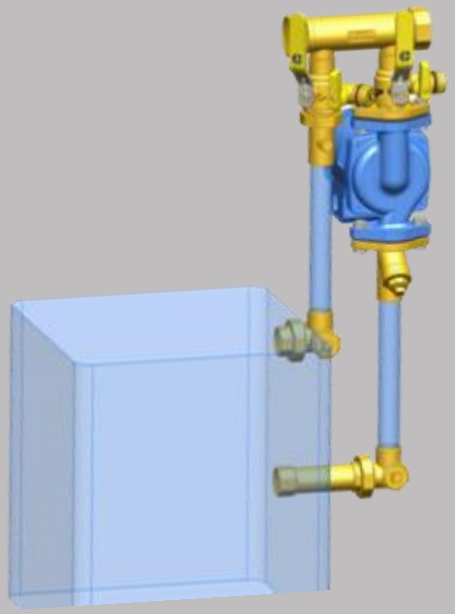

Model	Number	Boiler Connection	Connection to Hydro-Core	INSTALLATIONKIT
				Near Boiler Component Kit
VFC	15-150	1 1/4 MIP	1 1/4	FS-345
	45-225			
	45-225-SL			

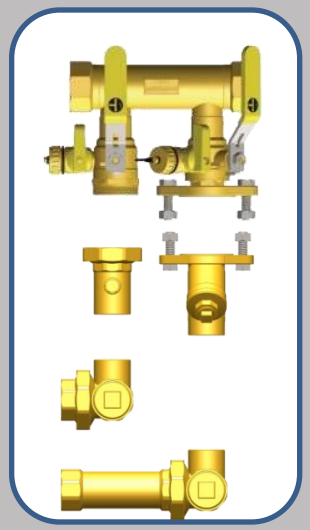

Connection to Hydro-Core	Manifold (Recommended Size in Bold)						
	Recommended Type	1" Run	1 1/4" Run		1 1/2" Run		2" Run
		SWT	FIP	SWT	FIP	SWT	SWT
1 1/4	Flange Left	-	48855-0	58855-0	**48865-0**	**58865-0**	-

HYDRO-CORE™

Laars

Floor Standing / Top Mount Boilers



Model	Number	Boiler Connection	Connection to Hydro-Core	INSTALLATIONKIT Near Boiler Component Kit
Mini-Therm JV	50	1 1/4 MIP	1 1/4	FT-245
	75			
	100			
	125			
	160			
	225			
NeoTherm	NTH-080	1 MIP	1	FT-144
	NTH-105			
	NTH-150			
	NTH-210			
	NTH-285	1 1/4 MIP	1 1/4	FT-245
	NTH-399			

Connection to Hydro-Core	Manifold (Recommended Size in Bold)						
	Recommended Type	1" Run	1 1/4" Run		1 1/2" Run		2" Run
		SWT	FIP	SWT	FIP	SWT	SWT
1	Flange Right	58744-0	**48754-0**	**58754-0**	48764-0	58764-0	58774-0
1 1/4	Flange Right	-	48755-0	58755-0	**48765-0**	**58765-0**	58775-0

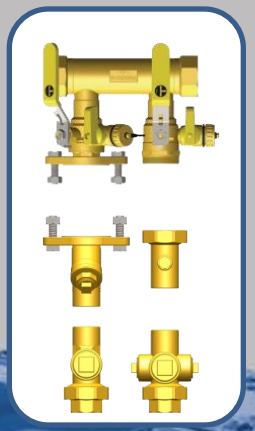

HYDRO-CORE™

Laars

Wall Hung Boilers w/ Integral Pumps

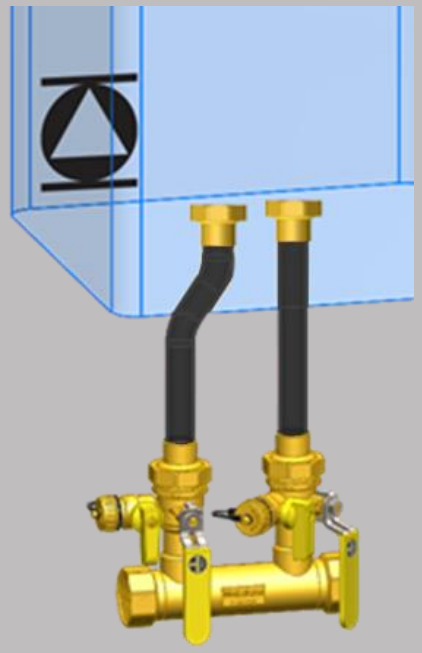

Model	Number	Boiler Connection	Connection to Hydro-Core	HYDRO-CORE FLEX	
				FIP	SWT
Mascot II	LMH	3/4 SWT	1	4FK3-WIS	5FK3-WIS

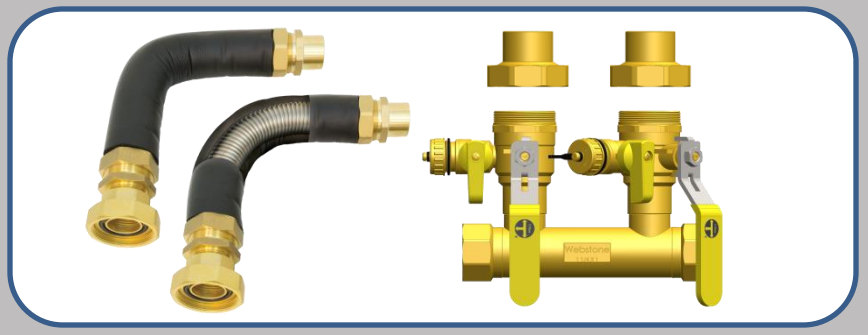

HYDRO-CORE™

Lochinvar

Floor Standing / Side Mount Boilers

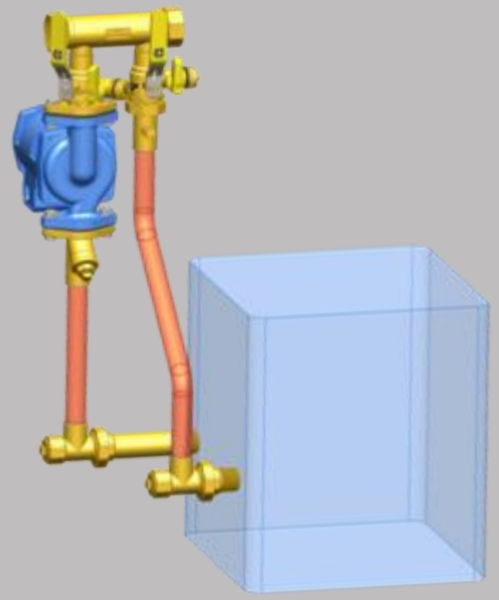

Model	Number	Boiler Connection	Connection to Hydro-Core	INSTALLATION KIT	
				Near Boiler Component Kit	Complete Near Boiler Piping Kit
Knight	KBN081	1 FIP	1	FS-184	NBP4-080
	KBN106				NBP4-105
	KBN151				NBP4-150
	KBN211				NBP4-210
	KBN286	1 1/4 FIP	1 1/4	FS-185	-

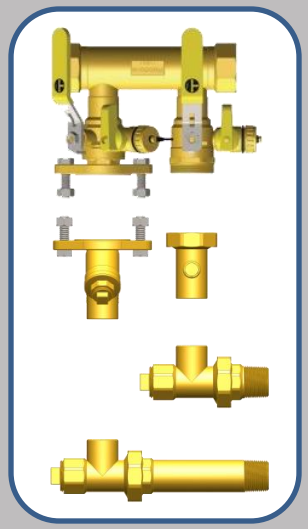

Connection to Hydro-Core	Manifold (Recommended Size in Bold)						
	Recommended Type	1" Run	1 1/4" Run		1 1/2" Run		2" Run
		SWT	FIP	SWT	FIP	SWT	SWT
1	Flange Right	58744-0	**48754-0**	**58754-0**	48764-0	58764-0	58774-0
1 1/4	Flange Right	-	48755-0	58755-0	**48765-0**	**58765-0**	58775-0

HYDRO-CORE™

Lochinvar
Wall Hung Boilers

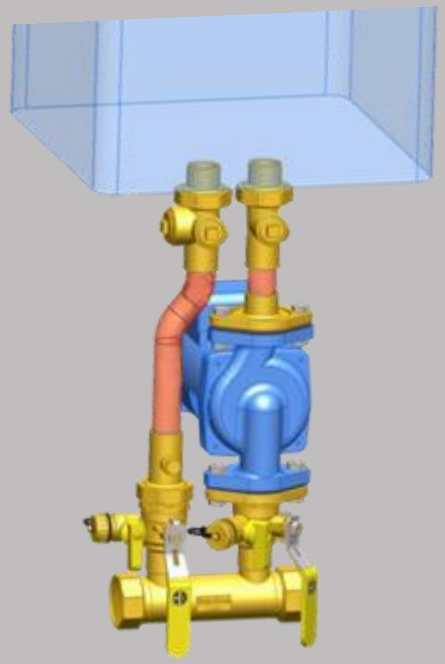

Model	Number	Boiler Connection	Connection to Hydro-Core	INSTALLATION KIT	
				Near Boiler Component Kit	Complete Near Boiler Piping Kit
Knight	WHN055	1 SWT	1	WH-154	NBP4-WHN
	WHN085				
	WHN110				
	WHN155				
	WHN199	1 1/4 SWT	1 1/4	WH-255	-
	WHN285				

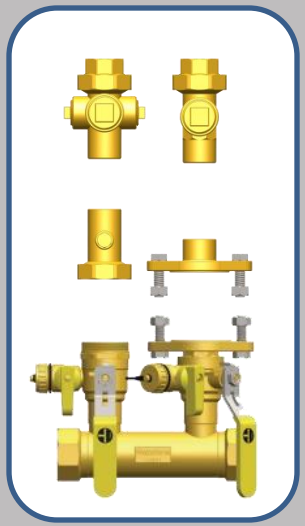

Connection to Hydro-Core	Manifold (Recommended Size in Bold)						
	Recommended Type	1" Run	1 1/4" Run		1 1/2" Run		2" Run
		SWT	FIP	SWT	FIP	SWT	SWT
1	Flange Right	58744-0	**48754-0**	**58754-0**	48764-0	58764-0	58774-0
1 1/4	Flange Right	-	48755-0	58755-0	**48765-0**	**58765-0**	58775-0

HYDRO-CORE™

Lochinvar

Wall Hung Boilers Con't

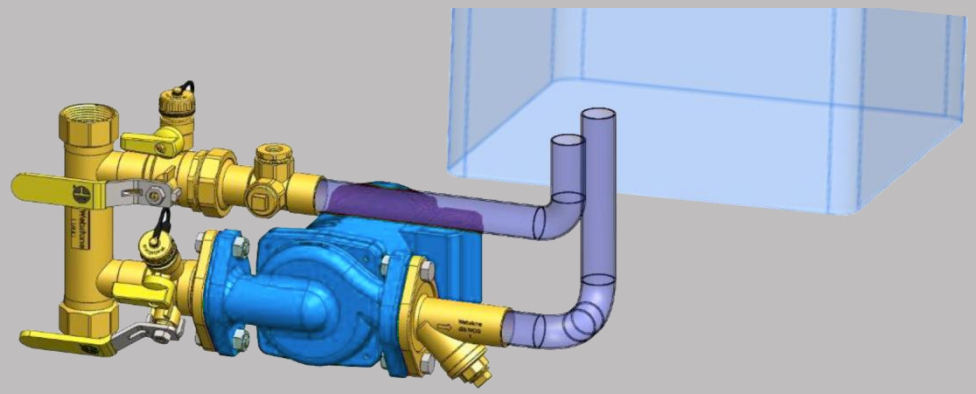

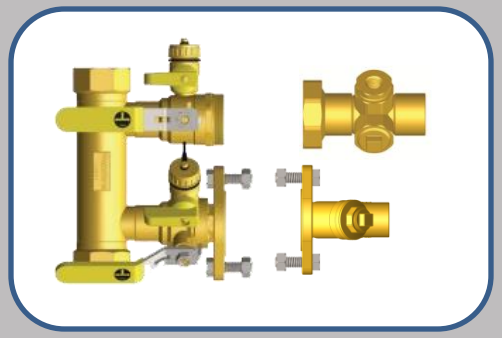

Model	Number	Boiler Connection	Connection to Hydro-Core	INSTALLATION KIT
				Near Boiler Component Kit
Cadet	CDN040	N/A	N/A	NBK4-CAD (Includes Manifold)
	CDN070			
	CDN100			
	CDN120			
	CDN120			

HYDRO-CORE™

Navien

Wall Hung Boilers w/ Integral Pump



Model	Number	Boiler Connection	Connection to Hydro-Core	HYDRO-CORE FLEX	
				FIP	SWT
CH-ASME	CH-180	1 MIP	1	4FK5-CH	5FK5-CH
	CH-210				
	CH-240				

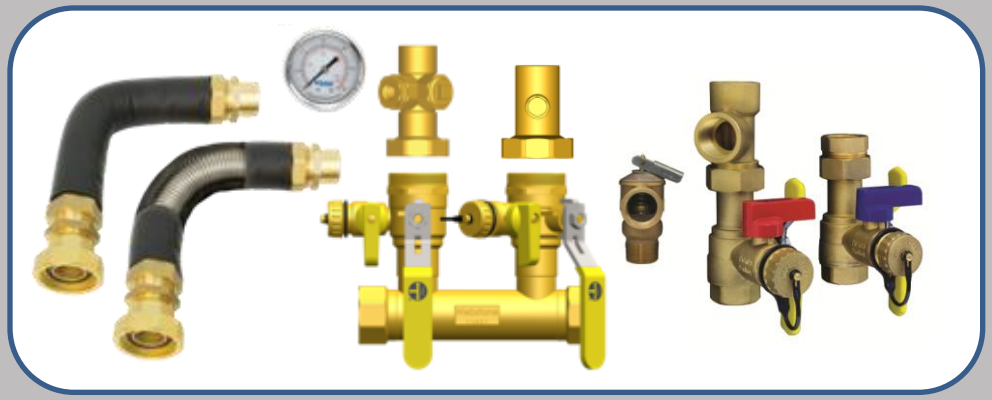

HYDRO-CORE™

Noritz

Wall Hung Boilers

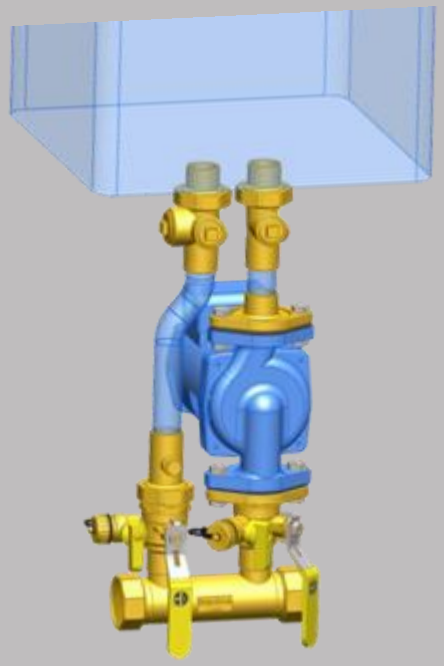

Model	Number	Boiler Connection	Connection to Hydro-Core	INSTALLATIONKIT
				Near Boiler Component Kit
NH	NH-1501-DV	1 MIP	1	WH-144
	NH-2001-DV			
	NH-150-DV			
	NH-199-DV			

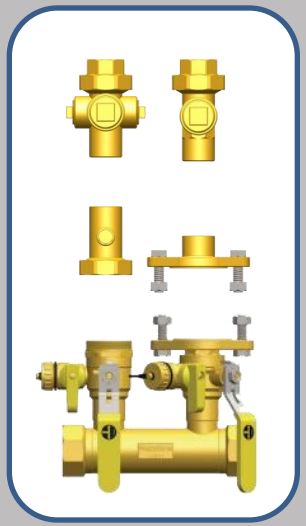

Connection to Hydro-Core	Manifold (Recommended Size in Bold)						
	Recommended Type	1" Run	1 1/4" Run		1 1/2" Run		2" Run
		SWT	FIP	SWT	FIP	SWT	SWT
1	Flange Right	58744-0	**48754-0**	**58754-0**	48764-0	58764-0	58774-0

HYDRO-CORE™

NY Thermal Inc.

Floor Standing / Side Mount Boilers

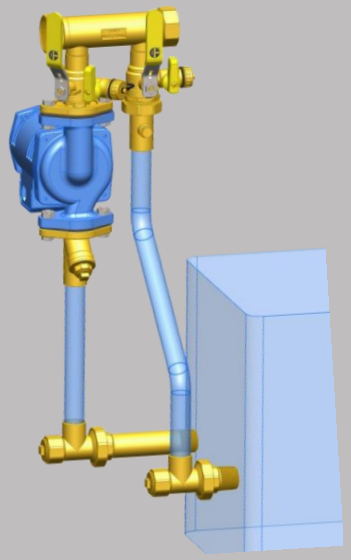

Model	Number	Boiler Connection	Connection to Hydro-Core	INSTALLATIONKIT Near Boiler Component Kit
Trinity Lx	Lx-150*	1 FIP	1	FS-184
	Lx-150E			
	Lx-200			
	Lx-300	1 1/4 FIP	1 1/4	FS-185
	Lx-400			
Trinity Ti	Ti-100*	1 FIP	1	FS-184
	Ti-150*			
	Ti-200			
Trinity Ts	Ts-080			

*Boiler sizes may differ in Canada.

Connection to Hydro-Core	Manifold (Recommended Size in Bold)						
	Recommended Type	1" Run	1 1/4" Run		1 1/2" Run		2" Run
		SWT	FIP	SWT	FIP	SWT	SWT
1	Flange Right	58744-0	**48754-0**	**58754-0**	48764-0	58764-0	58774-0
1 1/4	Flange Right	-	48755-0	58755-0	**48765-0**	**58765-0**	58775-0

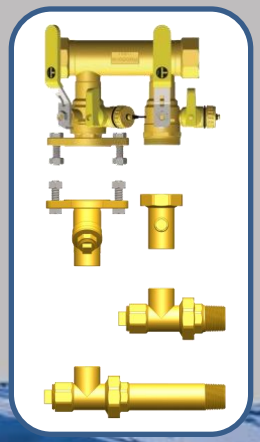

HYDRO-CORE™

NY Thermal Inc.

Wall Hung Boilers

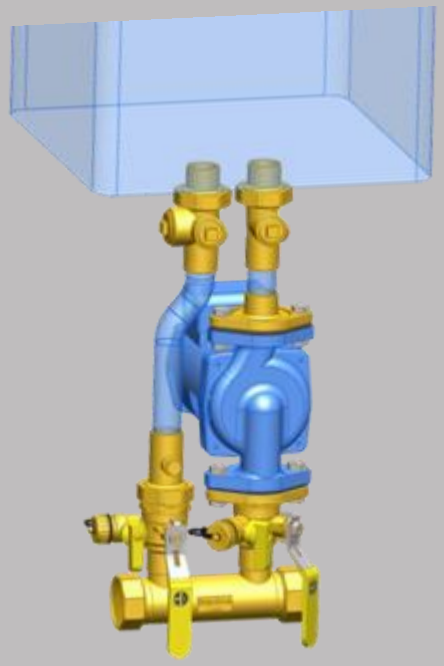

Model	Number	Boiler Connection	Connection to Hydro-Core	INSTALLATION KIT Near Boiler Component Kit
Matrix	M100V	3/4 MIP	3/4	WH-1R44
	M100			
Trinity Tft	Tft-60	1 MIP	1	WH-144
	Tft-85			
	Tft-110			
	Tft-155	1 1/4 MIP	1 1/4	WH-245
	Tft-175			
	Tft-200			
	Tft-250			
Trinity Tx	Tx51	1 MIP	1	WH-144
	Tx81			
	Tx101			
	Tx132/151			

Connection to Hydro-Core	Manifold (Recommended Size in Bold)						
	Recommended Type	1" Run	1 1/4" Run		1 1/2" Run		2" Run
		SWT	FIP	SWT	FIP	SWT	SWT
3/4	Flange Right	58744-0	**48754-0**	**58754-0**	48764-0	58764-0	58774-0
1	Flange Right	58744-0	**48754-0**	**58754-0**	48764-0	58764-0	58774-0
1 1/4	Flange Right	-	48755-0	58755-0	**48765-0**	**58765-0**	58775-0

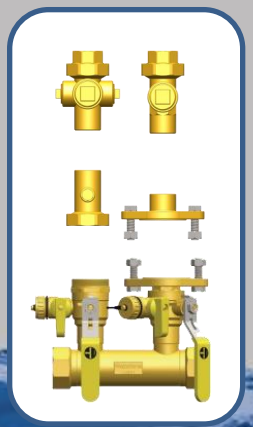

HYDRO-CORE™

NY Thermal Inc.

Wall Hung Boilers w/ Integral Pumps

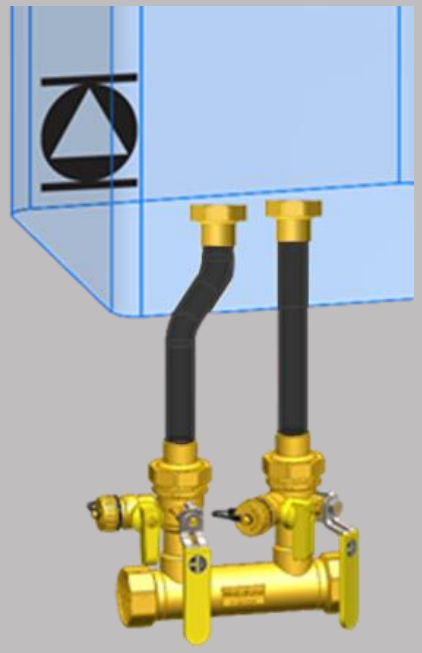

Model	Number	Boiler Connection	Connection to Hydro-Core	HYDRO-CORE FLEX	
				FIP	SWT
Trinity Tx	Tx132C/151C	1 MIP	1	4FK4-WIF	5FK4-WIF

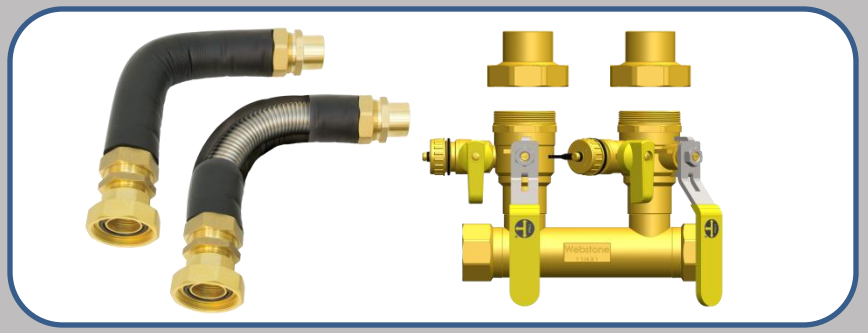

HYDRO-CORE™

Peerless

Floor Standing / Side Mount Boilers

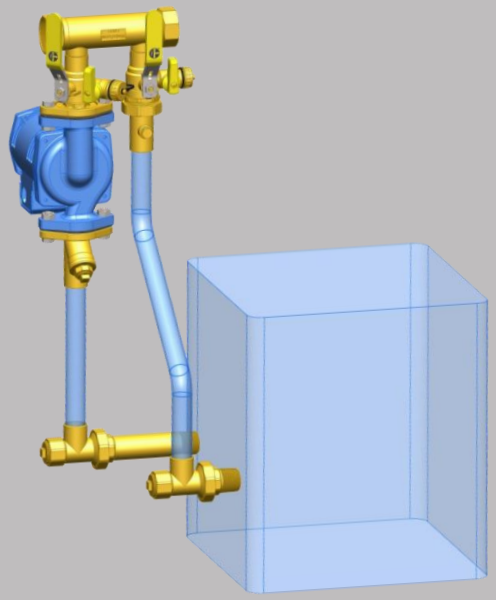

Model	Number	Boiler Connection	Connection to Hydro-Core	INSTALLATIONKIT
				Near Boiler Component Kit
Cast92	92-2	1 1/4 FIP	1 1/4	FS-185
	92-4			
Purfire	PF-210	1 MIP	1	FS-144

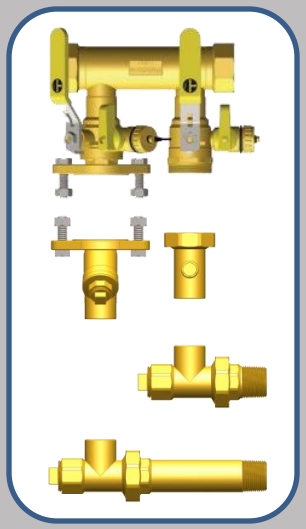

Connection to Hydro-Core	Manifold (Recommended Size in Bold)						
	Recommended Type	1" Run	1 1/4" Run		1 1/2" Run		2" Run
		SWT	FIP	SWT	FIP	SWT	SWT
1	Flange Right	58744-0	**48754-0**	**58754-0**	48764-0	58764-0	58774-0
1 1/4	Flange Right	-	48755-0	58755-0	**48765-0**	**58765-0**	58775-0

HYDRO-CORE™

Peerless

Floor Standing / Top Mount Boilers

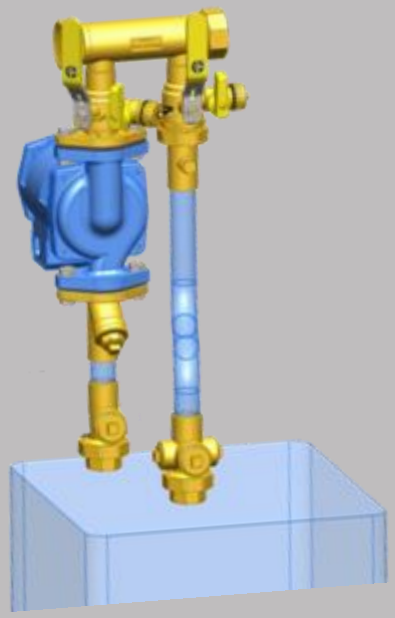

Model	Number	Boiler Connection	Connection to Hydro-Core	INSTALLATIONKIT
				Near Boiler Component Kit
Purfire	PF-050	1 MIP	1	FT-144
	PF-080			
	PF-110			
	PF-140			

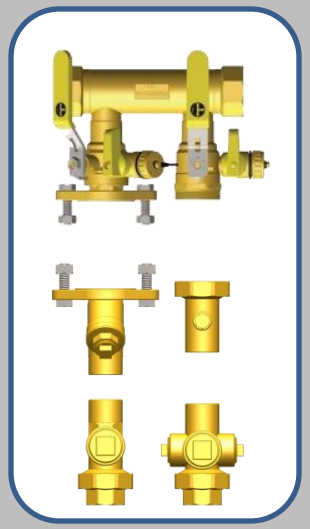

Connection to Hydro-Core	Manifold (Recommended Size in Bold)						
	Recommended Type	1" Run	1 1/4" Run		1 1/2" Run		2" Run
		SWT	FIP	SWT	FIP	SWT	SWT
1	Flange Right	58744-0	**48754-0**	**58754-0**	48764-0	58764-0	58774-0

HYDRO-CORE™

Peerless

Wall Hung Boilers w/ Integral Pumps

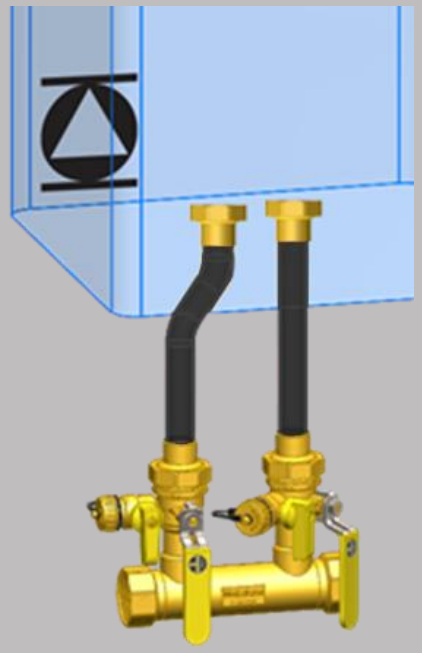

Model	Number	Boiler Connection	Connection to Hydro-Core	HYDRO-CORE FLEX	
				FIP	SWT
Combi	Combi 160	3/4 SWT	1	4FK3-WIS	5FK3-WIS

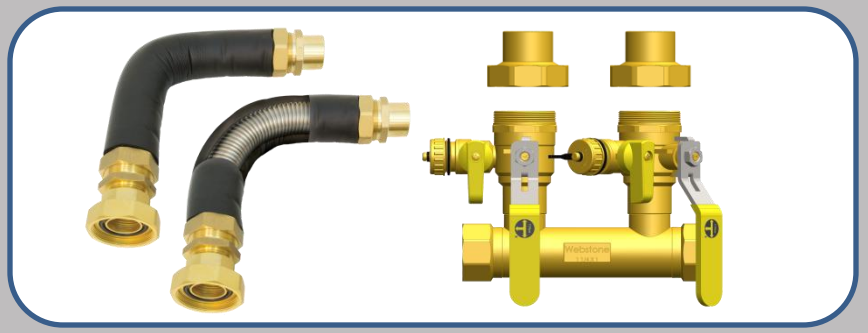

HYDRO-CORE™

Pensotti

Wall Hung Boilers w/ Integral Pumps

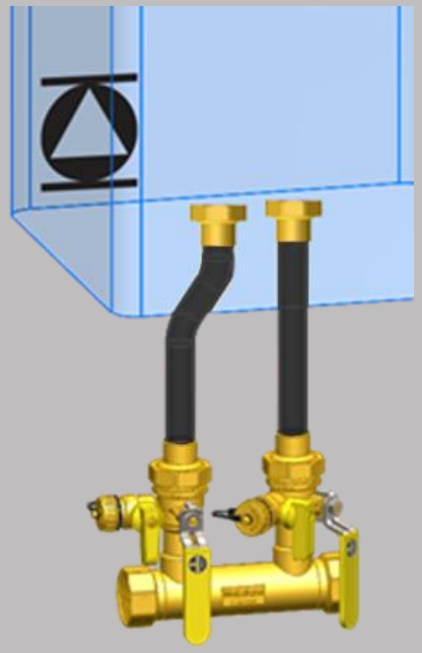

Model	Number	Boiler Connection	Connection to Hydro-Core	HYDRO-CORE FLEX	
				FIP	SWT
Solenne	PCC 34	3/4 SWT	1	4FK3-WIS	5FK3-WIS
	PCH 18				
	PCH 34B				
	PCH 50B				
	PCI 18/8				
	PCI 34/20				

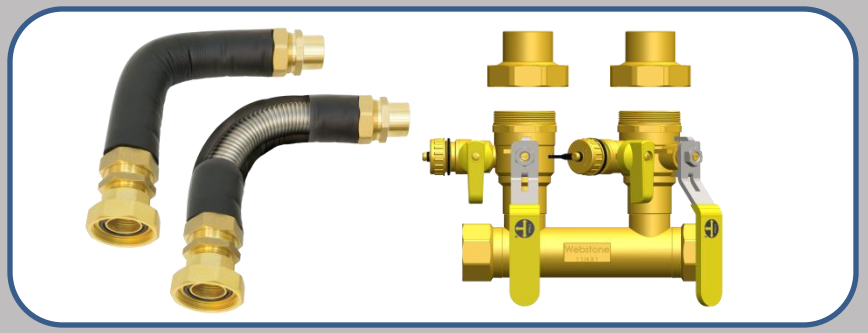

HYDRO-CORE™

Raypak

Wall Hung Boilers w/ Integral Pumps

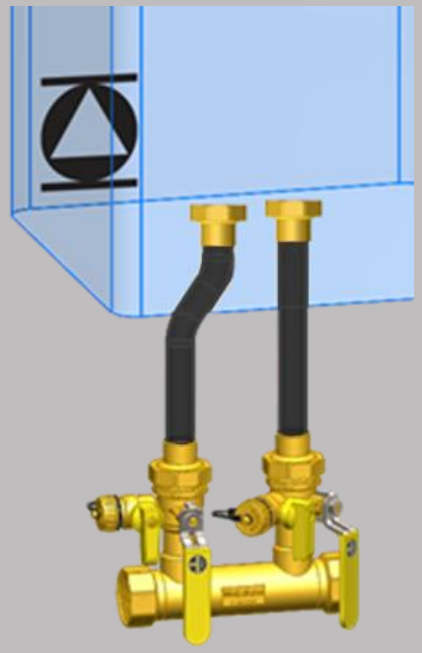

Model	Number	Boiler Connection	Connection to Hydro-Core	HYDRO-CORE FLEX	
				FIP	SWT
Xpak	Xpak-120	3/4 FIP	1	4FK3-WIF	5FK3-WIF
	Xpak-85				

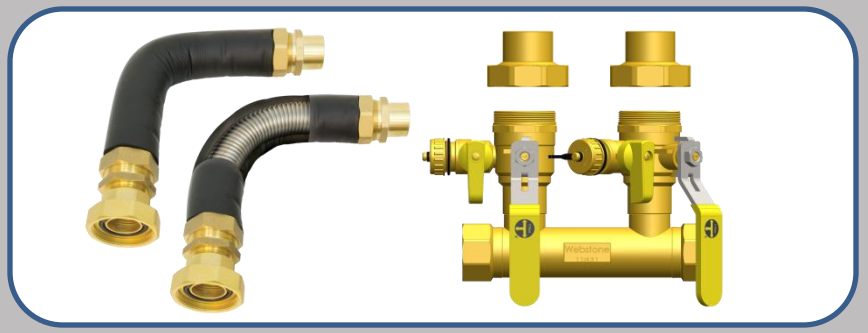

HYDRO-CORE™

Sime

Wall Hung Boilers w/ Integral Pumps

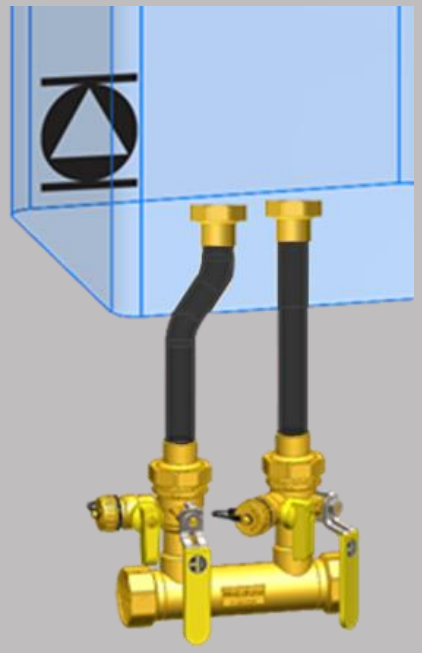

Model	Number	Boiler Connection	Connection to Hydro-Core	HYDRO-CORE FLEX	
				FIP	SWT
Format Zip	35-BF	3/4 SWT	1	4FK3-WIS	5FK3-WIS
Planet Dewy	30/50 BF				
Planet Dewy	60 BFR	1 MIP	1	4FK4-WIF	5FK4-WIF

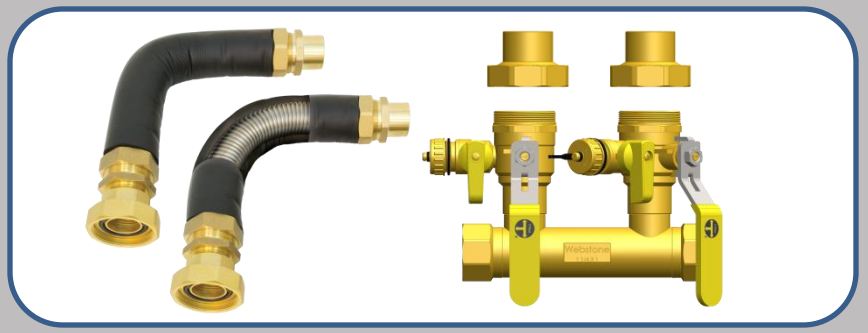

HYDRO-CORE™

Slant Fin

Floor Standing / Side Mount Boilers

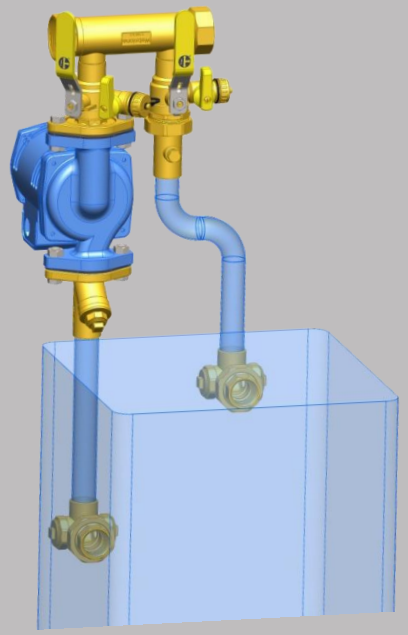

Model	Number	Boiler Connection	Connection to Hydro-Core	INSTALLATIONKIT
				Near Boiler Component Kit
Jaguar	J-390C	1 1/4 MIP	1 1/4	FS-245

Connection to Hydro-Core	Manifold (Recommended Size in Bold)						
	Recommended Type	1" Run	1 1/4" Run		1 1/2" Run		2" Run
		SWT	FIP	SWT	FIP	SWT	SWT
1 1/4	Flange Right	-	48755-0	58755-0	**48765-0**	**58765-0**	58775-0

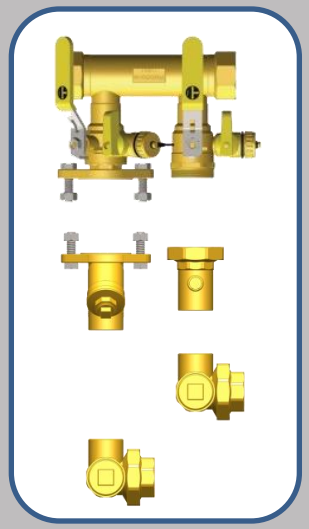

HYDRO-CORE™

Slant Fin

Floor Standing / Top Mount Boilers

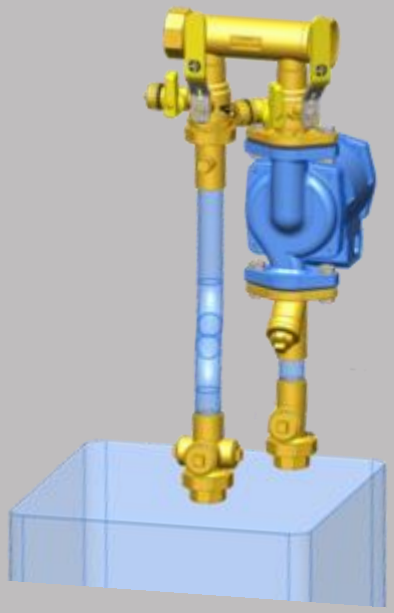

Model	Number	Boiler Connection	Connection to Hydro-Core	INSTALLATIONKIT
				Near Boiler Component Kit
Lynx	LX-90	1 MIP	1	FT-144
	LX-120			
	LX-120CB			
	LX-150			
	LX-150CB			

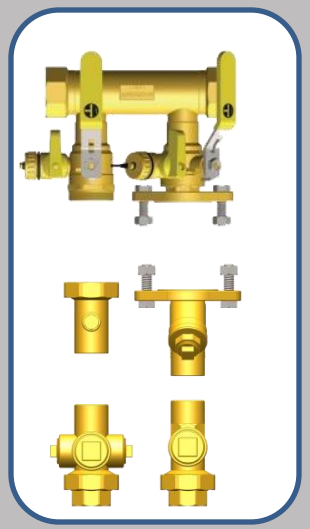

Connection to Hydro-Core	Manifold (Recommended Size in Bold)						
	Recommended Type	1" Run	1 1/4" Run		1 1/2" Run		2" Run
		SWT	FIP	SWT	FIP	SWT	SWT
1	Flange Left	-	**48854-0**	**58854-0**	48864-0	58864-0	-

HYDRO-CORE™

Slant Fin

Wall Hung Boilers

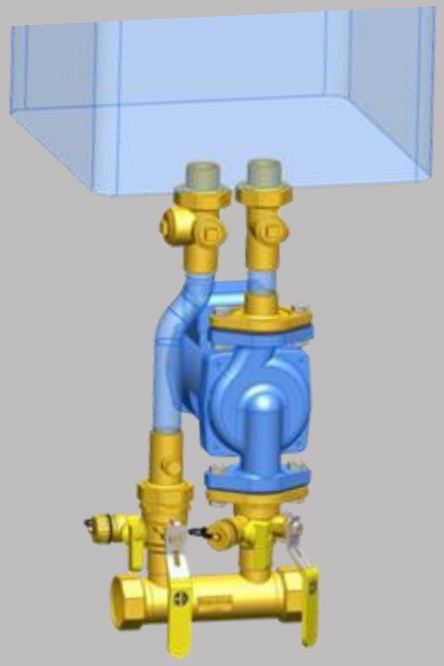

Model	Number	Boiler Connection	Connection to Hydro-Core	INSTALLATIONKIT Near Boiler Component Kit
CHS	CHS-80	1 MIP	1	WH-144
	CHS-85	1 SWT		
	CHS-110	1 MIP		
	CHS-155	1 1/4 MIP	1 1/4	WH-245
	CHS-175			
	CHS-200			
	CHS-250			
VSL	VSL-160B	3/4 SWT	1	WH-1R44

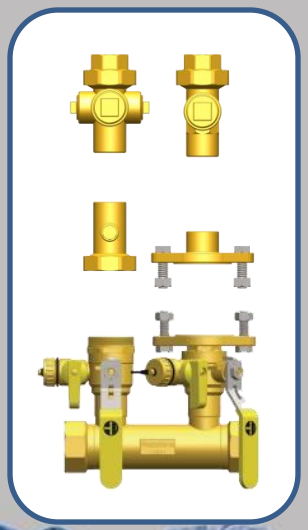

Connection to Hydro-Core	Manifold (Recommended Size in Bold)						
	Recommended Type	1" Run	1 1/4" Run		1 1/2" Run		2" Run
		SWT	FIP	SWT	FIP	SWT	SWT
1	Flange Right	58744-0	**48754-0**	**58754-0**	48764-0	58764-0	58774-0
1 1/4	Flange Right	-	48755-0	58755-0	**48765-0**	**58765-0**	58775-0

HYDRO-CORE™

Slant Fin

Wall Hung Boilers w/ Integral Pumps

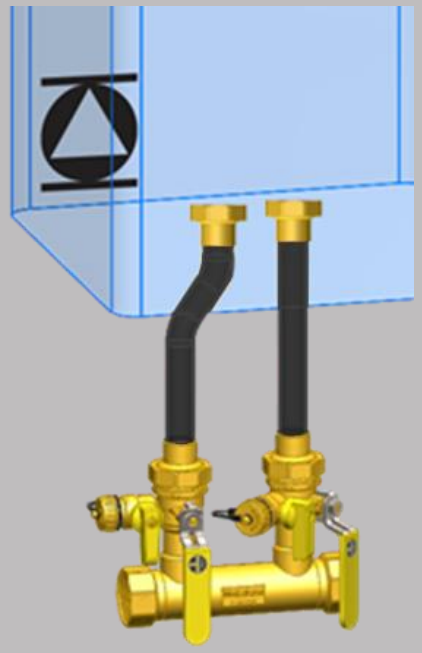

Model	Number	Boiler Connection	Connection to Hydro-Core	HYDRO-CORE FLEX	
				FIP	SWT
VSL	VSL-160C	3/4 SWT	1	4FK3-WIS	5FK3-WIS

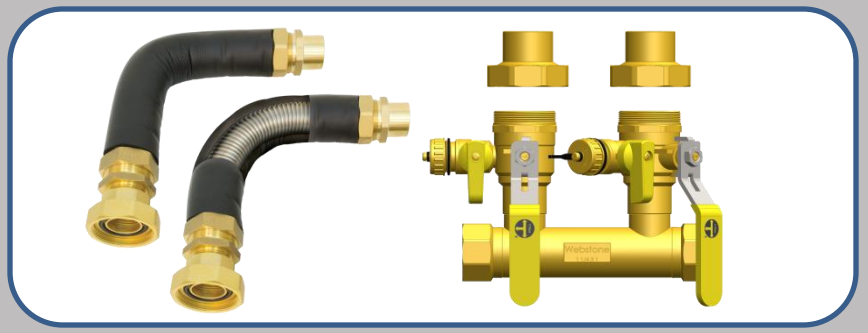

HYDRO-CORE™

Triangle Tube

Floor Standing / Top Mount Boilers



Model	Number	Boiler Connection	Connection to Hydro-Core	INSTALLATIONKIT
				Near Boiler Component Kit
Keystone	KS399	1 1/4 MIP	1 1/4	FT-245

Connection to Hydro-Core	Manifold (Recommended Size in Bold)						
	Recommended Type	1" Run	1 1/4" Run		1 1/2" Run		2" Run
		SWT	FIP	SWT	FIP	SWT	SWT
1 1/4	Flange Right	-	48755-0	58755-0	**48765-0**	**58765-0**	58775-0

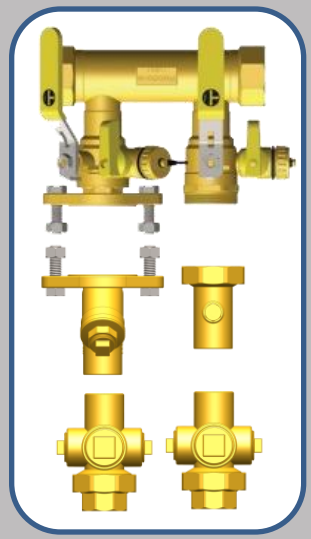

HYDRO-CORE™

Triangle Tube

Wall Hung Boilers

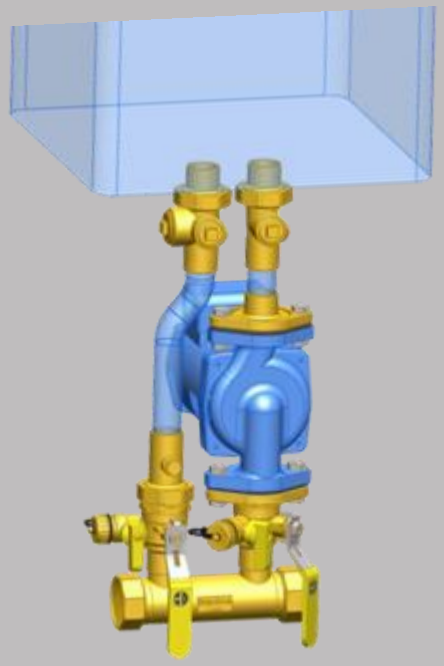

Model	Number	Boiler Connection	Connection to Hydro-Core	INSTALLATIONKIT
				Near Boiler Component Kit
Challenger Solo	CC85s	1 MIP	1	WH-144
	CC105s			
	CC125s			
	CC150s			
Prestige Solo	60			

Connection to Hydro-Core	Manifold (Recommended Size in Bold)						
	Recommended Type	1" Run	1 1/4" Run		1 1/2" Run		2" Run
		SWT	FIP	SWT	FIP	SWT	SWT
1	Flange Right	58744-0	**48754-0**	**58754-0**	48764-0	58764-0	58774-0

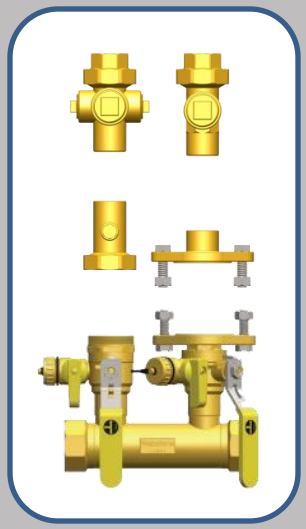

HYDRO-CORE™

Triangle Tube

Wall Hung Boilers Con't

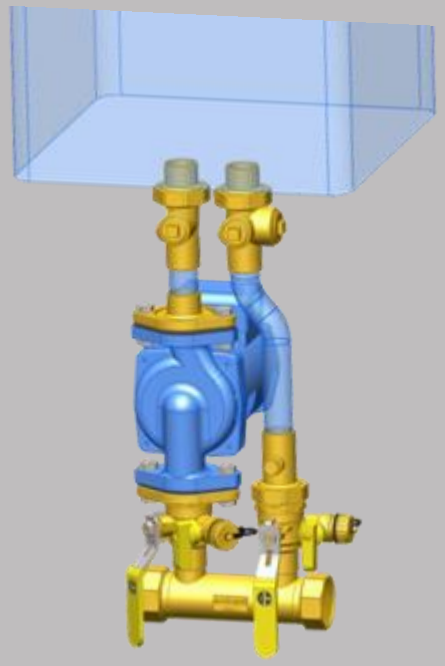

Model	Number	Boiler Connection	Connection to Hydro-Core	INSTALLATIONKIT
				Near Boiler Component Kit
Prestige Solo	175	1 1/4 MIP	1 1/4	WH-245
	250			

Connection to Hydro-Core	Manifold (Recommended Size in Bold)						
	Recommended Type	1" Run	1 1/4" Run		1 1/2" Run		2" Run
		SWT	FIP	SWT	FIP	SWT	SWT
1 1/4	Flange Left	-	48855-0	58855-0	**48865-0**	**58865-0**	-

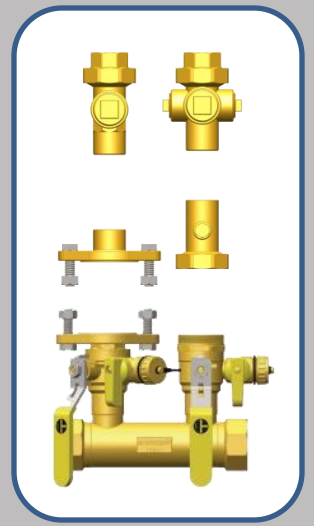

HYDRO-CORE™

Triangle Tube

Wall Hung Boilers w/ Integral Pumps

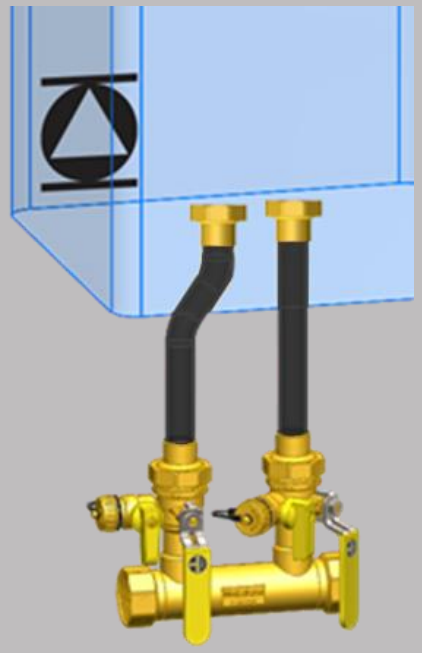

Model	Number	Boiler Connection	Connection to Hydro-Core	HYDRO-CORE FLEX	
				FIP	SWT
Prestige Excellence	PE 110	1 MIP	1	4FK4-TTS	5FK4-TTS
	PE 110 LP				
Prestige Solo	110				

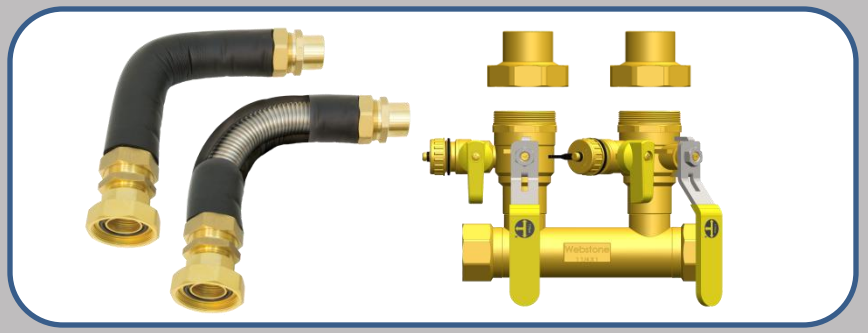

HYDRO-CORE™

Viessmann

Wall Hung Boilers

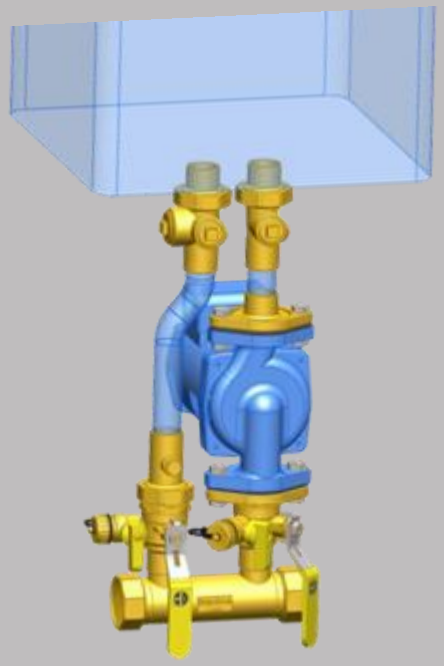

Model	Number	Boiler Connection	Connection to Hydro-Core	INSTALLATIONKIT Near Boiler Component Kit
Vitodens 100-W	WB1B 26	3/4 FIP	1	WH-1R44
	WB1B 35			
Vitodens 200-W	WB2B 19			
	WB2B 26			
	WB2B 35			
	WB2B 45	1 1/4 FIP	1 1/4	WH-245
	WB2B 60			
	WB2B 80			
	WB2B 105			

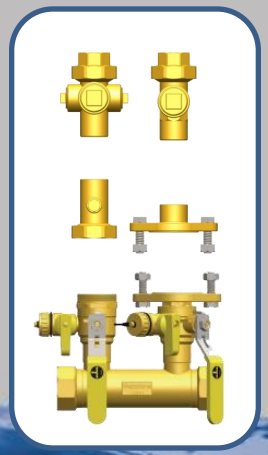

Connection to Hydro-Core	Manifold (Recommended Size in Bold)						
	Recommended Type	1" Run	1 1/4" Run		1 1/2" Run		2" Run
		SWT	FIP	SWT	FIP	SWT	SWT
1	Flange Right	58744-0	**48754-0**	**58754-0**	48764-0	58764-0	58774-0
1 1/4	Flange Right	-	48755-0	58755-0	**48765-0**	**58765-0**	58775-0

HYDRO-CORE™

Weil-McLain

Floor Standing / Top Mount Boilers



Model	Number	Boiler Connection	Connection to Hydro-Core	INSTALLATIONKIT
				Near Boiler Component Kit
Ultra	UG-080	1 MIP	1	FT-144
	UG-105			
	UG-155*		1 1/4	FT-2R45
	UG-230*			
*Manufacturer recommends Minimum Boiler Loop Pipe sizes for Ultra Series as indicated above.				

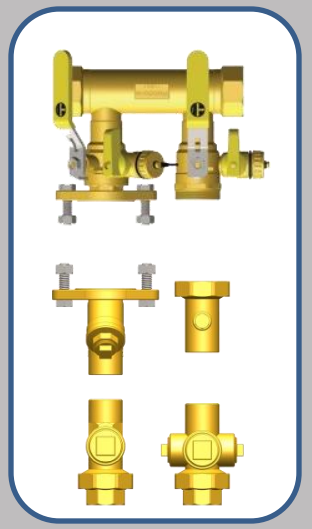

Connection to Hydro-Core	Manifold (Recommended Size in Bold)						
	Recommended Type	1" Run	1 1/4" Run		1 1/2" Run		2" Run
		SWT	FIP	SWT	FIP	SWT	SWT
1	Flange Right	58744-0	**48754-0**	**58754-0**	48764-0	58764-0	58774-0
1 1/4	Flange Right	-	48755-0	58755-0	**48765-0**	**58765-0**	58775-0

HYDRO-CORE™

Weil-McLain

Wall Hung Boilers w/ Integral Pumps

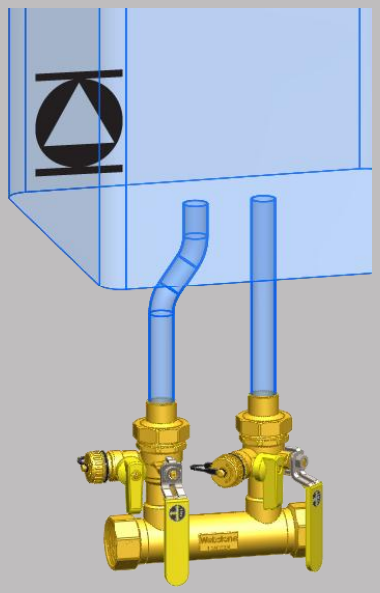

Model	Number	Boiler Connection	Connection to Hydro-Core	Union Connections*	
				Select 2 of the following	
				FIP	SWT
GV90+	GV90+3	1 MIP	1	HCE4-44	HCE4-54
	GV90+4				
*Available with ports for a pressure gauge or other devices if desired. See brochure for details.					



Connection to Hydro-Core	Manifold (Recommended Size in Bold)						
	Recommended Type	1" Run	1 1/4" Run		1 1/2" Run		2" Run
		SWT	FIP	SWT	FIP	SWT	SWT
1	Double Ball Drain	-	**48354-0**	**58354-0**	-	-	-

HYDRO-CORE™

Williamson-Thermoflo

Floor Standing / Side Mount Boilers

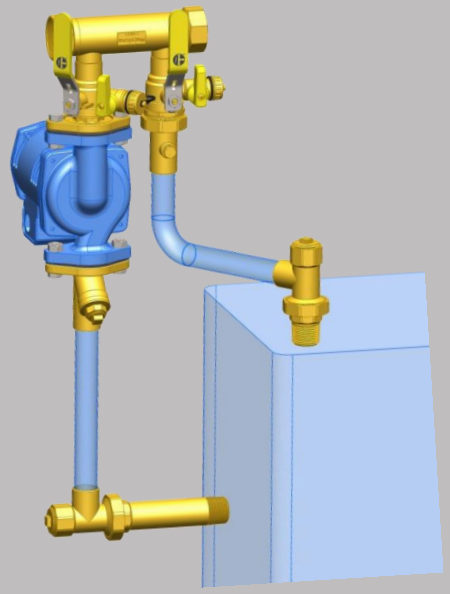

Model	Number	Boiler Connection	Connection to Hydro-Core	INSTALLATIONKIT Near Boiler Component Kit
GWA	GWA-052	1 1/4 FIP	1 1/4	FS-185
	GWA-070			
	GWA-105			
	GWA-140			
	GWA-175			
	GWA-210			
	GWA-245			

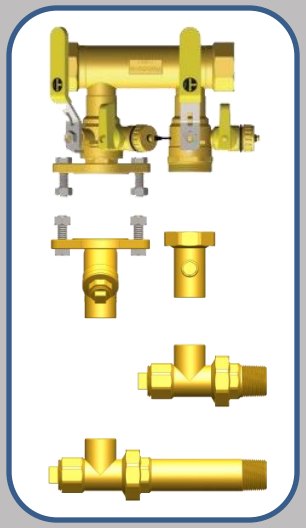

Connection to Hydro-Core	Manifold (Recommended Size in Bold)						
	Recommended Type	1" Run	1 1/4" Run		1 1/2" Run		2" Run
		SWT	FIP	SWT	FIP	SWT	SWT
1 1/4	Flange Right	-	48755-0	58755-0	**48765-0**	**58765-0**	58775-0

HYDRO-CORE™

Williamson-Thermaflo

Wall Hung Boilers w/ Integral Pumps

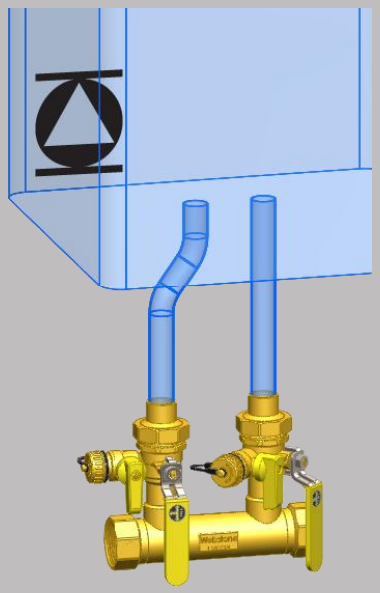

Model	Number	Boiler Connection	Connection to Hydro-Core	Union Connections*	
				Select 2 of the following	
				FIP	SWT
GWC	GWC-070	1 FIP	1	HCE4-44	HCE4-54
	GWC-105				
*Available with ports for a pressure gauge or other devices if desired. See brochure for details.					



Connection to Hydro-Core	Manifold (Recommended Size in Bold)						
	Recommended Type	1" Run	1 1/4" Run		1 1/2" Run		2" Run
		SWT	FIP	SWT	FIP	SWT	SWT
1	Double Ball Drain	-	**48354-0**	**58354-0**	-	-	-

Webstone

VALVE INNOVATION

HYDRO-CORE™

The Core of Any Professional Hydronic Installation

www.webstonevalves.com